Part No.	Description	Quan. Req'd. Per Assy.
	GROUP 15-01—GENERATOR SUPPORT (Continued)	
A-1395	INSULATOR, generator support	2
A-1397	BOLT, hex. hd., 5/16"-24 x 1 29/32" (Insulator support)	2
5910	NUT, hex., 5/16"-24 (Insulator support)	2
51833	LOCKWASHER, 5/16" (Insulator support)	2
640153	SUPPORT, generator, assembly	1
633949	BOLT, hex. hd., 3/8"-16 x 7/8" (Support to cylinder block)	2
5010	LOCKWASHER, 3/8" (Support to cylinder block)	2
A-1401	WASHER, flat, 21/64" I.D	2
A-1396	WASHER, flat, 33/64" I.D.	2
	This group for trucks equipped with high charging generator Auto-Lite No. GEG-5101D.	
	Engine Serial No. From 46601 To 47111 Inclusive	
A-7107	ANCHOR, generator brace	1
A-1399	BRACE, generator, short	1
A-3096	BRACE, mounting, voltage regulator	2
6609	BOLT, hex. hd., 5/16"-24 x 1 1/4" (Regulator to fender)	4
GM-446362	WASHER, plain, 5/16" (Regulator to fender)	2
51833	LOCKWASHER, 5/16" (Regulator to fender)	4
A-1491	BRACE and HANDLE, generator, assembly	1
A-1392	BRACKET, generator support, assembly	1
A-1470	BUSHING, locking, generator brace	1
6157	BOLT, hex. hd., 5/16"-18 x 1 1/4" (Bushing to generator)	1
6167	NUT, hex., 5/16"-18 (Bushing to generator)	1
51833	LOCKWASHER, 5/16" (Bushing to generator)	1
A-1400	GUIDE, adjusting, generator	1
6606	BOLT, hex. hd., 3/8"-24 x 1 1/8" (Adjusting guide to generator brace)	1
5901	NUT, hex., 3/8"-24 (Adjusting guide to generator brace)	1
5455	WASHER, plain, 3/8" (Adjusting guide to generator brace)	1
5010	LOCKWASHER, 3/8" (Adjusting guide to generator brace)	1
A-2375	NUT, clinch, 5/16"-24	4
A-1468	SCREW, pivot, generator	1
5901	NUT, hex., 3/8"-24 (For generator pivot screw)	1
5010	LOCKWASHER, 3/8" (For generator pivot screw)	1

For Wiring Harness, see Group 15-07. For Fan Belt, see Group 14-05.

Replacement parts for Generator 640151 or component parts thereof will be supplied only by the Electric Auto-Lite Co., or their Service Dealers.

GROUP 15-02—STARTING MOTOR

638646	SUPPORT, starting motor	1
6299	BOLT, hex. hd., 3/8"-16 x 7/8" (Starting motor support to crankcase)	1
5455	WASHER, flat, 3/8" (Starting motor support to crankcase)	1
5010	LOCKWASHER, 3/8" (Starting motor support to crankcase)	1
51406	BOLT, hex. hd., 3/8"-16 x 1 1/4" (Starting motor to flywheel housing)	2
5010	LOCKWASHER, 3/8" (Starting motor to flywheel housing)	2
52132	BOLT, hex. hd., 5/16"-24 x 5/8" (Starting motor to support)	1
GM-446362	WASHER, flat, 5/16" (Starting motor to support)	1
51833	LOCKWASHER, 5/16" (Starting motor to support)	1

Replacement parts for Starting Motors A-1245 (CJ-2A) or 641157 (CJ-3A) or component parts thereof will be supplied only by the Electric Auto-Lite Co., or their Service Sealers.

GROUP 15-03—DISTRIBUTOR

637615	SPRING, friction, distributor shaft	1
51514	BOLT, hex. hd., 1/4"-20 x 5/8" (Distributor to block)	1
52702	WASHER, plain, 1/4" (Distributor to block)	1
52706	LOCKWASHER, 1/4" (Distributor to block)	1

Replacement parts for Distributor A-9075 or component parts thereof will be supplied only by the Electric Auto-Lite Co., or their Service Dealers.

GROUP 15-04—VOLTAGE REGULATOR

52892	SCREW, rd. hd., 1/4"-20 x 5/8" (Voltage regulator to fender splasher)	3
52669	NUT, hex., 1/4"-20 (Voltage regulator to fender splasher)	3
53058	LOCKWASHER, 1/4" (Voltage regulator to fender splasher)	3

Replacement parts for Voltage Regulator 640156 or compoment parts thereof will be supplied only by the Electric Auto-Lite Co., or their Service Dealers.

GROUP 15-05—COIL AND IGNITION SWITCH
Switch Integral with Coil—(Model CJ-2A)

640292	CABLE, secondary, ignition coil, assembly	1
661949	CYLINDER and ONE KEY, ignition switch, assembly (Yale & Towne Mfg.)	1
644000	CYLINDER and ONE KEY, ignition switch, a sembly (Hurd Lock & Mfg. Co.) **(Use 644001)**	1
662420	GROMMET, 3/16" (Secondary cable thru dash)	1
640870	KEY, ignition lock cylinder (Give key No. S-1000 to S-1249 inclusive when ordering) (Yale & Towne Mfg.)	1
643999	KEY, ignition lock cylinder (Give key No. W-100 to W-499 inclusive when ordering) (Hurd Lock & Mfg. Co.)	1
642073	SWITCH, ignition (Yale & Towne Mfg.)	1
644001	SWITCH, ignition (Hurd Lock & Mfg. Co.)	1

Part No.	Description	Quan. Req'd. Per Assy.
	GROUP 15-05—COIL AND IGNITION SWITCH (Continued)	
53917	SCREW, rd. hd., No. 10-32 x ¾" (Coil bracket to dash)	3
50933	WASHER, flat, No. 10 (Coil bracket to dash)	3
52221	LOCKWASHER, No. 10 (Coil bracket to dash)	3
	Replacement parts for Coil 640135 will be supplied only by the Electric Auto-Lite Co., or their Service Dealers.	
	GROUP 15-05A—COIL AND IGNITION SWITCH	
	Ignition Switch Not Integral with Coil. Coil Mounted on Engine—(Model CJ-3A)	
642125	BODY, ignition switch	1
642133	CABLE, secondary, ignition, assembly	1
664715	CYLINDER, ignition switch lock	1
664713	KEY, ignition switch (Series C-250 to C-499 inclusive)	2
664713-1	KEY, blank (uncut)	2
643648	NUT, hex., 1"-32 (Switch mounting)	1
668721	PLATE, ignition switch	1
54395	SCREW, rd. hd., No. 10-16 x ⅜" (Switch plate to instrument panel)	2
643711	SWITCH, ignition, assembly (Includes lock cylinder and keys)	1
A-5197	SCREW, fil. hd., No. 8-32 x 9/32"	2
52653	NUT, hex., No. 8-32	2
53422	LOCKWASHER, No. 8, Int.	2
A-1350	LOCKWASHER, No. 8, Keyed	2
5914	NUT, hex., ¼"-28 (Coil to cylinder block)	2
631105	WASHER, ¼", special (Coil to cylinder block)	2
52706	LOCKWASHER, ¼" (Coil to cylinder block)	2
	Replacement parts for Coil 647820 will be supplied only by the Electric Auto-Lite Co., or their Service Dealers.	
	Switch Not Integral. Coil Assembled to Engine—(Model CJ-2A)	
	Serial Numbers 46479 to 50800 Inc. and 50901 to 51184 Inc.	
A-5083	CABLE, primary, ignition coil	1
642133	CABLE, secondary, ignition coil	1
116827	CYLINDER and KEY, ignition switch, assembly	1
116828	KEY, ignition switch **(Series RD750 to RD999, JL500 to JL999 or 11132A to 33332A)**	1
643160	SWITCH, ignition, lock cylinder and keys	1
5914	NUT, hex., ¼"-28 (Ignition coil to cylinder block)	2
631105	WASHER, ¼", special (Ignition coil to cylinder block)	2
52706	LOCKWASHER, ¼" (Ignition coil to cylinder block)	2
635886	STUD, ¼"-20 x 1" (Ignition coil to cylinder block)	2
	Replacement parts for Coil 634410 will be supplied only by the Electric Auto-Lite Co., or their Service Dealers.	
	GROUP 15-06—SPARK PLUGS AND WIRES	
301435	BUSHING, rubber, 11/16 in. diam. **(Use 347002)**	1
347002	BUSHING, rubber, 11/16" hole (Split to simplify installation)	1
640289	CABLE, ignition spark plug No. 1, assembly	1
640290	CABLE, ignition spark plug No. 2, assembly	1
640291	CABLE, ignition spark plug No. 3 and 4, assembly	2
A-5083	CABLE, primary, ignition coil (CJ-3A)	1
637863	GASKET, spark plug	4
640587	KIT, spark plug and coil wires **(Up to Serial No. .....)**	1
	Consists of:	
640292	1 CABLE, secondary, coil	
640289	1 CABLE, spark plug, No. 1	
640290	1 CABLE, spark plug, No. 2	
640291	2 CABLE, spark plug, No. 3 and No. 4	
644403	KIT, spark plug and coil wires **(After Serial No. .....)**	1
	Consists of:	
642133	1 CABLE, secondary, coil	
640289	1 CABLE, spark plug, No. 1	
640290	1 CABLE, spark plug, No. 2	
640291	2 CABLE, spark plug, No. 3 and No. 4	
638647	PLUG with GASKET, spark, assembly (Champion) (Int'ch'ble with 646808)	4
646808	PLUG with GASKET, spark, assembly (Auto-Lite) (Int'ch'ble with 638647)	4
393594	SEAL, weather, spark plug cables, distributor end	6
314369	TERMINAL, ignition cable, distributor end	4
638654	TERMINAL, ignition cable, spark plug end	4
	GROUP 15-07—BODY WIRING (CJ-2A)	
640281	CABLE, fuel gauge dash unit to tank unit	1
645741	CABLE, horn button to connector, assembly **(After Serial No. 178361)**	1
640288	CABLE, ignition coil to ammeter	1
640287	CABLE, ignition switch to fuel gauge	1
A-5598	CLIP, ¼ in., head light cable to left fender and lower grille flange	4
52650	SCREW, rd. hd., No. 10-24 x ⅝" (Clip attaching)	4
52651	NUT, hex., No. 10-24 (Clip attaching)	4
52221	LOCKWASHER, No. 10 (Clip attaching)	4
A-5449	CLIP, 5/16"	13

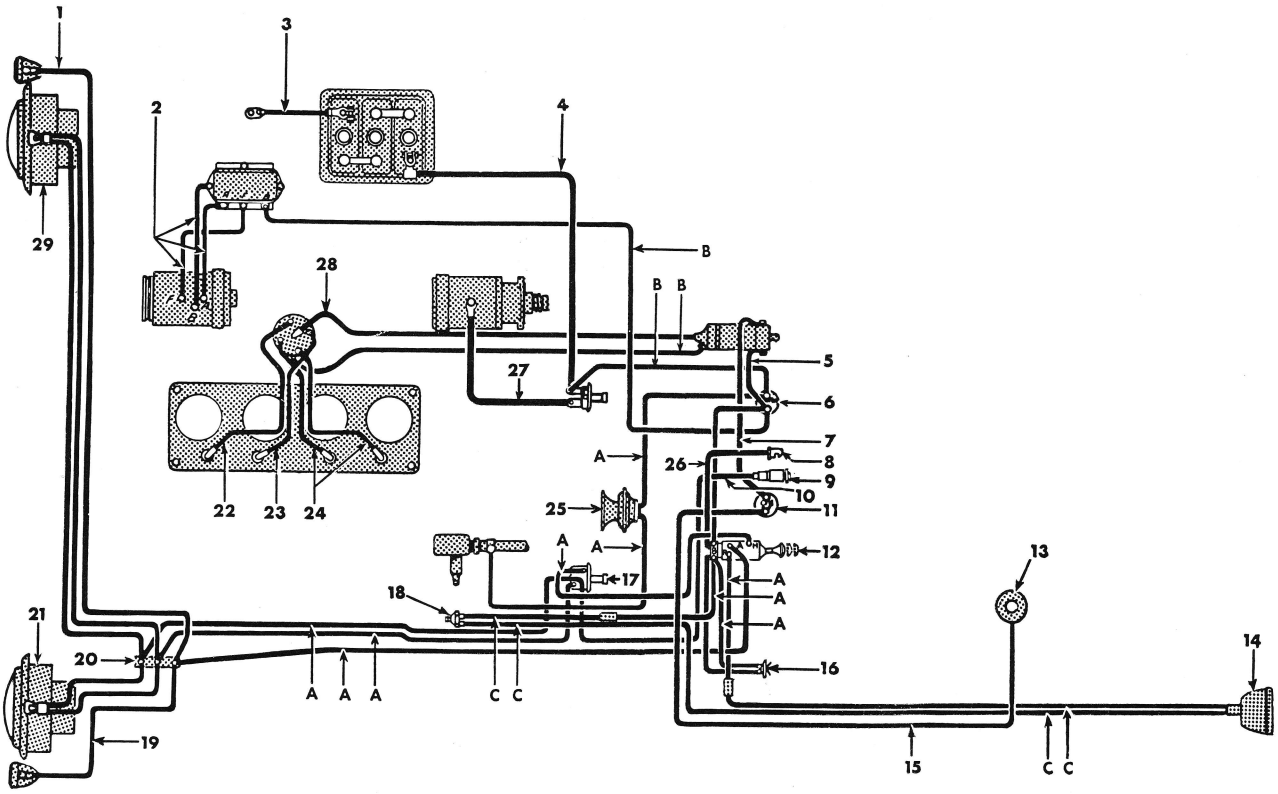

FIG. No. 25—WIRING DIAGRAM (CJ-2A)

Ref. No.	Part No.	Description	Group No.	Ref. No.	Part No.	Description	Group No.
1	**644216**	Cable, parking light, right	15-09A	17	**640260**	Switch, foot dimmer	15-12
2	**640277**	Harness, generator	15-07	18	**A-1271**	Switch, stop light	15-14
3	**640257**	Strap, ground	15-18A	19	**641609**	Cable, parking light, left	15-09A
4	**640258**	Cable, battery	15-18A	20	**639599**	Block, junction	15-15
5	**640288**	Cable, coil to ammeter	15-07	21	**640709**	Light, head, left	15-09
6	**640761**	Ammeter	16-01	22	**640289**	Cable, spark plug No. 1	15-06
7	**640287**	Cable, switch to fuel gauge	15-07	23	**640290**	Cable, spark plug No. 2	15-06
8	**640284**	Light, instrument panel	15-11	24	**640291**	Cable, spark plug No. 3 and 4	15-06
9	**642982**	Light, tell-tale	15-11A	25	**A-17715**	Horn	15-17
10	**643016**	Cable, tell-tale light	15-11A	26	**640642**	Lead, instrument light	15-11
11	**640763**	Gauge, fuel, dash unit	16-03	27	**640259**	Cable, starting motor	15-18A
12	**641622**	Switch, light	15-12A	28	**640292**	Cable, secondary, coil	15-05
13	**640694**	Gauge, fuel, tank unit	16-03	29	**640710**	Light, head, right	15-09
14	**646594**	Light, tail and stop	15-09B	A	**645176**	Harness, body, long	15-07
15	**640281**	Cable, fuel gauge	15-07	B	**644036**	Harness, body, right	15-07
16	**635737**	Switch, instrument light	15-12B	C	**647829**	Harness, chassis	15-07

Part No.	Description	Quan. Req'd. Per Assy.
	GROUP 15-07—BODY WIRING (CJ-2A) (Continued)	
A-5450	CLIP, 7/16", wiring to frame side rail	3
52237	SCREW, rd. hd., No. 10-24 x 1/2" } Wiring to frame side rail	1
52221	LOCKWASHER, No. 10 } Wiring to frame side rail	1
5113	SCREW, rd. hd., No. 10-24 x 1/2" } Clip attaching	6
52889	SCREW, rd. hd., No. 10-24 x 5/8" } Clip attaching	4
352	NUT, hex., No. 10-24 } Clip attaching	6
52221	LOCKWASHER, No. 10 } Clip attaching	6
644106	CLIP, tail lamp cable to frame **(After Serial No. .....)**	5
€61341	CLIP, wiring harness to front floor pan **(Up to Serial No. .....)**	1
€35981	CONNECTOR, 2 wire slip	1
635985	CONNECTOR, 3 wire slip **(Up to Serial No. 47099)**	2
345961	GROMMET, 13/32" (Wiring harness thru dash)	2
662276	GROMMET, 5/8" (Wiring harness thru dash)	1
640261	HARNESS, body wiring, long **(Up to Serial No. 47099)**	1

Includes:
(1 CABLE, ammeter to horn
1 CABLE, head light junction block to dimmer switch
1 CABLE, light switch circuit breaker to stop light switch
1 CABLE, light switch to foot dimmer switch
1 CABLE, light switch to parking light
1 CABLE, light switch to tail light

Part No.	Description	Quan. Req'd. Per Assy.
	GROUP 15-07—BODY WIRING (CJ-2A) (Continued)	
	1 CABLE, steering post to horn 1 CABLE, stop light switch to stop light)	
641949	HARNESS, body wiring, long **(After Serial No. 47099, Up to Serial No. 51228)**	1
	Includes: 1 CABLE, ammeter to horn 1 CABLE, head light junction block to foot dimmer switch, lower beam 1 CABLE, head light junction block to foot dimmer switch, upper beam 1 CABLE, light switch circuit breaker terminal to instrument lamp switch 1 CABLE, light switch circuit cable to connector 1 CABLE, light switch to connector 1 CABLE, light switch to foot dimmer switch 1 CABLE, light switch to junction block	
643261	HARNESS, body wiring, long—**After Serial No. 51228—Up to Serial No. 75448**	1
	Includes: 1 CABLE, ammeter to horn 1 CABLE, foot dimmer switch (upper beam) to tell-tale lamp 1 CABLE, head light junction block to foot dimmer switch, lower beam 1 CABLE, head light junction block to foot dimmer switch, upper beam 1 CABLE, horn to horn button 1 CABLE, light switch circuit breaker terminal to instrument light switch 1 CABLE, light switch circuit breaker to connector 1 CABLE, light switch to connector 1 CABLE, light switch to foot dimmer switch 1 CABLE, light switch to junction block	
644759	HARNESS, body wiring, long—**After Serial No. 75448—Up to Serial No. 97740**	1
	Includes: 1 CABLE, ammeter to horn 1 CABLE, foot dimmer switch (upper beam) to tell-tale light 1 CABLE, head light junction block to foot dimmer switch, lower beam 1 CABLE, head light junction block to foot dimmer switch, upper beam 1 CABLE, light switch circuit breaker terminal to instrument light switch 1 CABLE, light switch circuit breaker to connector 1 CABLE, light switch terminal "H" to foot dimmer switch 1 CABLE, light switch to connector (tail light) 1 CABLE, light switch to junction block and parking light 1 CABLE, steering gear post to horn terminal	
644762	HARNESS, body wiring, long **(After Serial No. 97740, Up to Serial No. 116421)**	1
645176	HARNESS, body wiring, long **(After Serial No. 116421, Up to Serial No. 178361)**	1
645743	HARNESS, body wiring, long **(After Serial No. 178361)**	1
	(Horn contact brush removed from steering column).	
	Includes: 1 CABLE, ammeter to horn 1 CABLE, foot dimmer switch (upper beam) to indicator lamp cable, assembly 1 CABLE, headlight junction block to foot dimmer switch, lower beam 1 CABLE, headlight junction block to foot dimmer switch, upper beam 1 CABLE, light switch circuit breaker terminal to instrument light switch 1 CABLE, light switch circuit breaker to connector (Stop light switch) 1 CABLE, light switch terminal "H" to foot dimmer switch (Terminal "B") 1 CABLE, light switch to connector cable (Tail light) 1 CABLE, light switch to junction block (Parking light) 1 CABLE, steering gear post to horn terminal	
640273	HARNESS, body wiring, right side	1
	Includes: 1 CABLE, ignition coil to distributor 1 CABLE, starter switch to ammeter 1 CABLE, voltage regulator to ammeter	
644036	HARNESS, body wiring, right side **(Serial No. from ..... to .....)**	1
	Includes: 1 CABLE, ammeter to light switch circuit breaker 1 CABLE, coil to distributor 1 CABLE, regulator (battery) to ammeter 1 CABLE, starter switch to ammeter	
641138	HARNESS, chassis wiring **(Up to Serial No. 51228)**	1
	Includes: 1 CABLE, connector to tail light 1 CABLE, steering gear post to horn terminal 1 CABLE, stop light switch to connector 1 CABLE, stop light switch to stop light	
643260	HARNESS, chassis wiring **(After Serial No. 51228, Up to Serial No. 75448) (Use 644758)**	1
	Includes: 1 CABLE, connector to tail light 1 CABLE, stop light switch to connector 1 CABLE, stop light switch to stop light	
644758	HARNESS, chassis wiring **(After Serial No. 75448, Up to Serial No. 219465)**	1
647829	HARNESS, chassis wiring **(After Serial No. 219465)**	1

Part No.	Description	Quan. Req'd. Per Assy.
	GROUP 15-07—BODY WIRING (CJ-2A) (Continued)	
	Includes:	
	1 CABLE, connector to tail light	
	1 CABLE, stop light switch to connector	
	1 CABLE, stop light switch to stop light	
640277	HARNESS, wiring, generator to voltage regulator (All except Heavy Duty Generator)	1
	Includes:	
	1 CABLE, generator ground to regulator	
	1 CABLE, generator to circuit breaker	
	1 CABLE, generator to regulator field	
644033	HARNESS, wiring, generator to voltage regulator (Heavy Duty Generator)	1
	Includes:	
	1 CABLE, generator ground to regulator	
	1 CABLE, generator to regulator arm	
	1 CABLE, generator to regulator field	
A-5085	LOOM, 3/16" I.D. x 9½" long, headlight left cable	1
A-5086	LOOM, 3/16" I.D. x 42" long, headlight right cable and fuel gauge to fuel gauge cable	2
306688	SLEEVE, insulator	32
307556	TERMINAL, eye type	24
356053	TERMINAL, flag eye type	1
A-1372	TERMINAL, slip type	2
635757	TERMINAL, slip type	4
	GROUP 15-07A—BODY WIRING (CJ-3A)	
638977	BLOCK, junction, 3 post	1
52606	SCREW, rd. hd., ¼"-28 x ⅜" (Junction block to left fender splash apron)	2
5914	NUT, hex., ¼"-28 (Junction block to left fender splash apron)	2
52706	LOCKWASHER, ¼" (Junction block to left fender splash apron)	2
6536	NUT, hex., No. 10-32 (Junction block terminals)	3
A-1089	WASHER, flat, ¼", special (Junction block terminals)	3
52221	LOCKWASHER, No. 10 (Junction block terminals)	3
640281	CABLE, fuel gauge, dash to tank unit	1
A-5598	CLIP, ¼"	1
5113	SCREW, rd. hd., No. 10-24 x ½" (Voltage regulator cable to dash)	1
6352	NUT, hex., No. 10-24 (Voltage regulator cable to dash)	1
52221	LOCKWASHER, No. 10 (Voltage regulator cable to dash)	1
A-5449	CLIP, 5/16"	1
5113	SCREW, rd. hd., No. 10-24 x ½" (Fuel gauge cable to instrument panel)	1
6352	NUT, hex., No. 10-24 (Fuel gauge cable to instrument panel)	1
52221	LOCKWASHER, No. 10 (Fuel gauge cable to instrument panel)	1
A-5449	CLIP, 5/16"	4
52237	SCREW, rd. hd., No. 10-24 x ½" (Headlight cable to radiator guard)	2
52650	SCREW, rd. hd., No. 10-24 x ⅝" (Headlight cable to radiator guard)	1
52651	NUT, hex., No. 10-24 (Headlight cable to radiator guard)	3
52221	LOCKWASHER, No. 10 (Headlight cable to radiator guard)	3
A-5449	CLIP, 5/16"	3
52237	SCREW, rd. hd., No. 10-24 x ½" (Right parking light cable to radiator guard)	3
52651	NUT, hex., No. 10-24 (Right parking light cable to radiator guard)	3
52221	LOCKWASHER, No. 10 (Right parking light cable to radiator guard)	3
A-5450	CLIP, 7/16"	2
52650	SCREW, rd. hd., No. 10-24 x ⅝" (Headlight cable to left front fender)	2
52651	NUT, hex., No. 10-24 (Headlight cable to left front fender)	2
52221	LOCKWASHER, No. 10 (Headlight cable to left front fender)	2
A-5450	CLIP, 7/16"	1
5113	SCREW, rd. hd., No. 10-24 x ½" (Wiring harness to dash)	1
52221	LOCKWASHER, No. 10 (Wiring harness to dash)	1
A-5450	CLIP, 7/16"	1
5113	SCREW, rd. hd., No. 10-24 x ½" (Wiring harness to rear cross member)	1
6352	NUT, hex., No. 10-24 (Wiring harness to rear cross member)	1
52221	LOCKWASHER, No. 10 (Wiring harness to rear cross member)	1
644106	CLIP, ½" wide, 1½" long (Tail light cable to frame side member and rear cross member)	5
635981	CONNECTOR, 2 wire, slip type	3
345961	GROMMET, 13/32" (Wiring harness thru dash panel)	1
662276	GROMMET, ⅝" (Wiring harness thru dash panel)	1
645743	HARNESS, body wiring, long	1
	Includes:	
	1 CABLE, ammeter to horn	
	1 CABLE, foot dimmer switch (upper beam) to tell-tale light	
	1 CABLE, headlight junction block to foot dimmer switch, lower beam	
	1 CABLE, headlight junction block to foot dimmer switch, upper beam	
	1 CABLE, horn button connector to horn terminal	
	1 CABLE, light switch circuit breaker to stop light switch	
	1 CABLE, light switch terminal "H" to foot dimmer switch (Terminal "B")	
	1 CABLE, light switch to junction block (Parking light)	
	1 CABLE, light switch to tail light	
647958	HARNESS, body wiring, right side	1

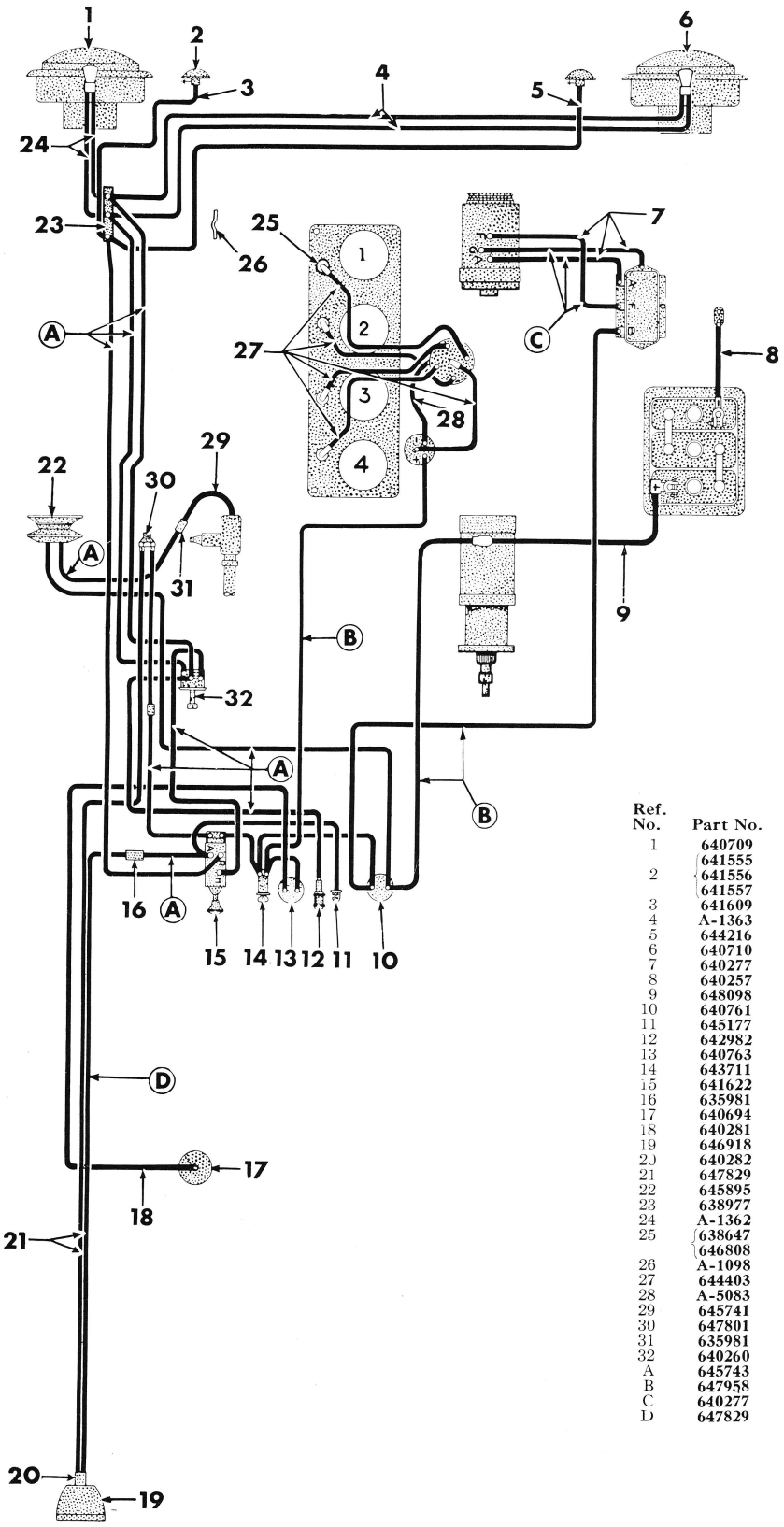

Ref. No.	Part No.	Description	Group No.
1	640709	Light, head, left	15-09
	641555	Bezel, parking light	15-09A
2	641556	Lens, parking light	15-09A
	641557	Gasket, lens	15-09A
3	641609	Socket and cable, left	15-09A
4	A-1363	Wire, right headlight	15-09A
5	644216	Socket and cable, right	15-09A
6	640710	Light, head, right	15-09
7	640277	Harness, generator to regulator	15-07
8	640257	Strap, ground	15-18A
9	648098	Cable, positive	15-18A
10	640761	Ammeter	16-01
11	645177	Light, instrument panel	15-11
12	642982	Light, tell-tale	15-11A
13	640763	Gauge, fuel, dash unit	16-03
14	643711	Switch, ignition	15-05A
15	641622	Switch, lighting	15-12A
16	635981	Connector	15-07
17	640694	Gauge, fuel, tank unit	16-03
18	640281	Cable, fuel gauge	15-07
19	646918	Light, tail and stop	15-09B
20	640282	Plug, connecting	15-09B
21	647829	Harness, tail light	15-07
22	645895	Horn	15-17
23	638977	Block, junction	15-15
24	A-1362	Wire, headlight, left	15-09
25	638647	Plug, spark (Champion)	15-06
	646808	Plug, spark (Auto-Lite)	15-06
26	A-1098	Strap, engine ground	15-18A
27	644403	Kit, spark plug and coil wires	15-06
28	A-5083	Cable, primary	15-05A
29	645741	Cable, horn	15-17A
30	647801	Switch, stop light	15-14
31	635981	Connector	15-07
32	640260	Switch, dimmer	15-12
A	645743	Harness, body, long	15-07A
B	647958	Harness, body, right side	15-07A
C	640277	Harness, generator to voltage regulator	15-07A
D	647829	Harness, chassis	15-07A

FIG. No. 26—WIRING, INSTRUMENTS AND SWITCHES (CJ-3A)

Part No.	Description	Quan. Req'd. Per Assy.
	GROUP 15-07A—BODY WIRING (CJ-3A) (Continued)	
	Includes:	
	1 CABLE, ignition coil to ignition switch to fuel guage	
	1 CABLE, starter switch to ammeter	
	1 CABLE, voltage regulator to ammeter to ignition switch to circuit breaker	
647829	HARNESS, chassis wiring	1
	Includes:	
	1 CABLE, light switch connector to tail light	
	1 CABLE, stop light switch to light switch circuit breaker	
	1 CABLE, stop light switch to stop light	
640277	HARNESS, wiring, generator to voltage regulator (All except Heavy Duty Generator)	1
	Includes:	
	1 CABLE, generator ground to regulator	
	1 CABLE, generator to circuit breaker	
	1 CABLE, generator to regulator field	
640282	PLUG, connector, tail light	1
393594	SEAL, weather, distributor secondary cable	1
306688	SLEEVE, insulator, terminal, 3/16" I.D. 3/4" long	2
307556	TERMINAL, eye type, 3/16" eye	7
393196	TERMINAL, eye type, 9/32" eye	1
642377	TERMINAL, slip type	4
	GROUP 15-08—SEALED BEAM UNITS AND LAMPS	
52837	LAMP, 6-8V, 1 C.P., Type G 3½, No. 51, headlight high beam tell-tale **(After Serial No. 32433)**	1
54025	LAMP, 6-8V, 2 C.P., Type G 4½, No. 55, parking light **(After Serial No. 97740)**	2
51804	LAMP, 6-8V, 3 C.P., Type G 6, No. 63, single contact base	3
52124	LAMP, 6-8V, 3 C.P., Type S 8, No. 1158, double contact base	1
640837	UNIT, sealed beam, 6-8V, 32 C.P., headlight, assembly **(Use 117730)**	2
117730	UNIT, sealed beam, headlight, assembly	2
644449	UNIT, sealed beam, headlight, assembly **(Export)**	2
	GROUP 15-09—HEADLIGHTS	
640709	**Headlight, Left, Assembly Complete**	1
640710	**Headlight, Right, Assembly Complete**	1
644519	**Headlight, Left, Assembly (Export Only)**	1
644520	**Headlight, Right, Assembly (Export Only)**	1
53366	SCREW, rd. hd., ¼"-28 x ½" — Headlight to radiator guard **(Up to Serial No. 158110)**	8
52161	NUT, hex., ¼"-28 — Headlight to radiator guard **(Up to Serial No. 158110)**	6
53058	LOCKWASHER, ¼" — Headlight to radiator guard **(Up to Serial No. 158110)**	8
52722	SCREW, bd. hd., No. 14 x ½" — Headlight to radiator guard **(After Serial No. 158110)**	8
53854	LOCKWASHER, ¼" — Headlight to radiator guard **(After Serial No. 158110)**	8

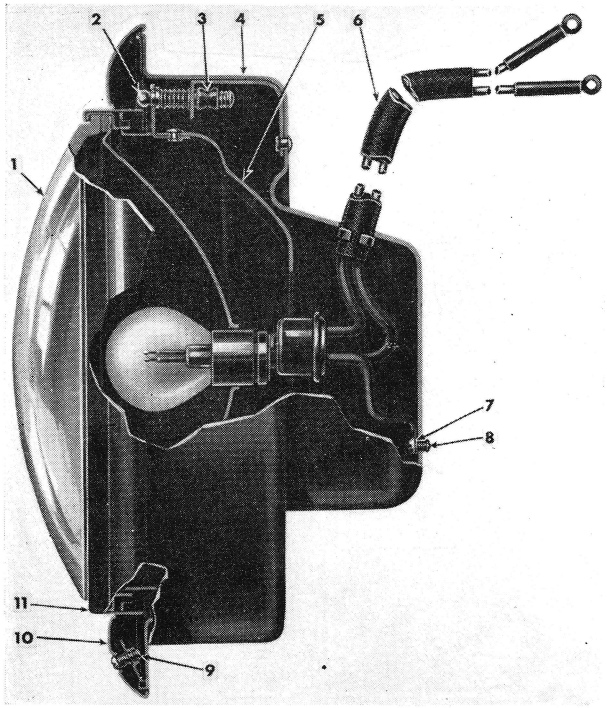

FIG. No. 27—HEADLIGHT

Ref. No.	Part No.	Description	Group No.
1	**640837**	Sealed Beam	15-08
2	**640835**	Screw, adjusting	15-09
3	**640836**	Nut, adjusting screw	15-09
4	**640691**	Housing	15-09
5	**640834**	Ring, mounting	15-09
6	**A-1362**	Wire, left	15-09
	A-1363	Wire, right	15-09
7	**A-1731**	Cable, ground	15-09
8	**53826**	Screw, ground	15-09
9	**640839**	Screw, door	15-09
10	**643732**	Door (Chrome)	15-09
11	**640838**	Ring, retaining	15-09

Part No.	Description	Quan. Req'd. Per Assy.
	GROUP 15-09—HEADLIGHTS (Continued)	
A-1731	CABLE, ground, headlight	2
53826	SCREW, bd. hd., No. 8 x 1/4" } Headlight ground	2
52705	LOCKWASHER, No. 8 } Headlight ground	2
640695	DOOR, headlight, assembly (Black) **(Up to Serial No. 38687)**	2
643732	DOOR, headlight, assembly (Chrome Plated) **(After Serial No. 38687)**	2
640839	SCREW, No. 8-32 x 3/8" (Headlight door)	2
642051	GROMMET (Cable through housing)	1
640691	HOUSING, headlight, assembly	2
640836	NUT, headlight adjusting screw	2
640834	RING, sealed beam unit mounting	2
640838	RING, sealed beam unit retaining	2
640835	SCREW, adjusting, headlight	2
640897	SCREW, fil. hd., No. 8-32 x 3/8" (Unit retaining ring)	6
117116	SPRING, headlight mounting ring	4
640837	UNIT, sealed beam, 6-8V, 32 C.P., headlight, assembly	2
642084	WASHER, 29/64" x 1" (Cable through housing)	1
A-1362	WIRE, headlight, left, assembly	1
A-1363	WIRE, headlight, right, assembly	1
	GROUP 15-09A—PARKING LIGHT	
640197	**Light, Parking, Left, Assembly (Up to Serial No. 45680)**	1
640198	**Light, Parking, Right, Assembly (Up to Serial No. 45680)**	1
643941	**Light, Parking, Left, Assembly (Chrome Door) (After Serial No. 45680, Up to Serial No. 97740)**	1
643942	**Light, Parking, Right, Assembly (Chrome Door) (After Serial No. 45680, Up to Serial No. 97740)**	1
640573	NUT, hex., 5/16"-24 } Parking light to bracket	2
52510	LOCKWASHER, 5/16", shakeproof } Parking light to bracket	2
52237	SCREW, rd. hd., No. 10-24 x 1/2" } Right hand parking lamp to lower grille flange and fender splasher	3
52650	SCREW, rd. hd., No. 10-24 x 5/8" } Right hand parking lamp to lower grille flange and fender splasher	1
52651	NUT, hex., No. 10-24 } Right hand parking lamp to lower grille flange and fender splasher	4
52221	LOCKWASHER, No. 10 } Right hand parking lamp to lower grille flange and fender splasher	4
641555	BEZEL, parking light **(After Serial No. 97740)**	2
53867	SCREW, rd. hd., No. 8-32 x 1/2" } Parking light bezel to radiator guard	4
52653	NUT, hex., No. 8-32 } Parking light bezel to radiator guard	4
52705	LOCKWASHER, No. 8 } Parking light bezel to radiator guard	4
640789	DOOR, parking light, assembly (Black) **(Up to Serial No. 45680)**	2
643729	DOOR, parking light, assembly (Chrome Plated) **(After Serial No. 45680, Up to Serial No. 97740)**	2
640570	GASKET, parking light door	2
641557	GASKET, parking light lens **(After Serial No. 97740)**	2
640787	HOUSING and CABLE, parking light, left, assembly **(Up to Serial No. 97740)**	1
640788	HOUSING and CABLE, parking light, right, assembly **(Up to Serial No. 97740)**	1
54025	LAMP, 6-8V, 2 C.P., Type G 4 1/2, No. 55	2

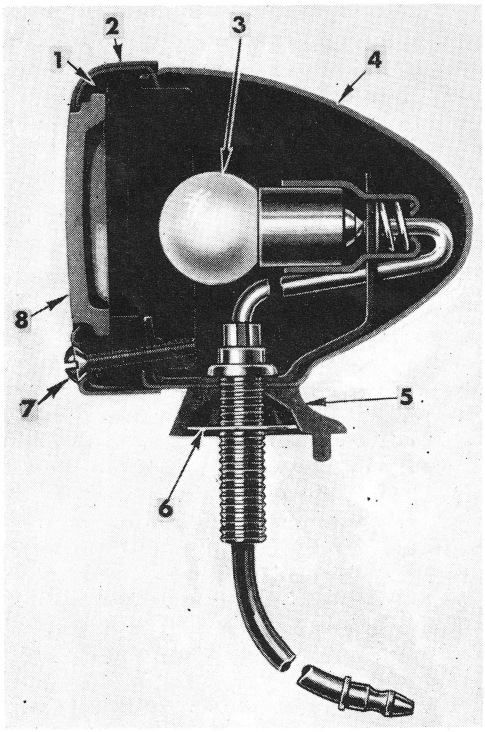

FIG. No. 28—PARKING LAMP
(Up to Serial No. 97740)

Ref. No.	Part No.	Description	Group No.
1	**640570**	Gasket door	15-09A
2	**640789**	Door (black)	15-09A
	643729	Door (chrome)	15-09A
3	**51804**	Lamp, 3 C. P.	15-08
4	**640787**	Housing, with cable, left	15-09A
	640788	Housing, with cable, right	15-09A
5	**640791**	Plate, mounting	15-09A
6	**640573**	Nut, mounting	15-09A
7	**640790**	Screw, door	15-09A
8	**640571**	Lens, door	15-09A

Part No.	Description	Quan. Req'd. Per Assy.
	GROUP 15-09A—PARKING LIGHT (Continued)	
640571	LENS, left and right parking light door	2
641556	LENS, parking light **(After Serial No. 97740)**	2
640791	PLATE, parking light mounting	2
640790	SCREW, parking light door	2
641609	SOCKET and CABLE, parking light, left, assembly **(After Serial No. 97740)**	1
644216	SOCKET and CABLE, parking light, right, assembly **(After Serial No. 97740)**	1

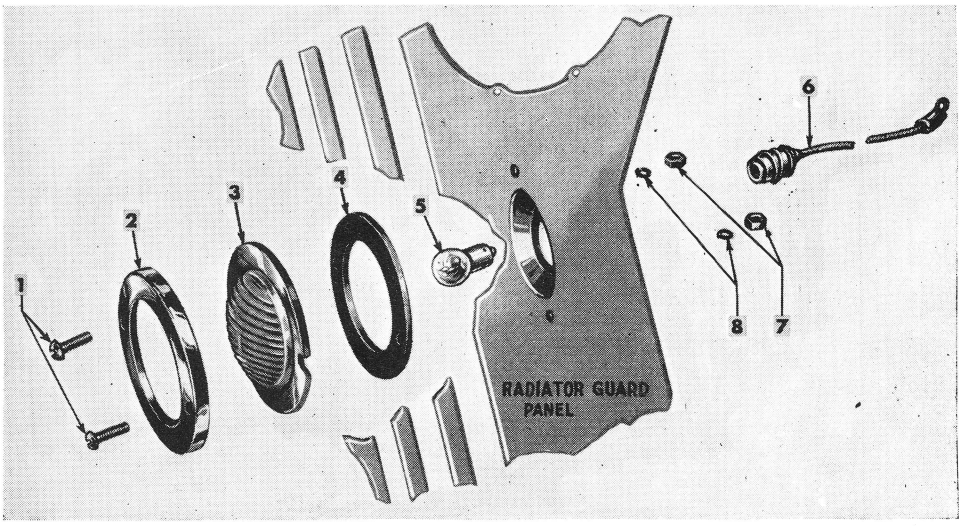

FIG. No. 29—PARKING LIGHT **(CJ-2A After Serial No. 97740, All CJ-3A)**

Ref. No.	Part No.	Description	Group No.
1	**53867**	Screw	15-09A
2	**641555**	Bezel, parking light	15-09A
3	**641556**	Lens, parking light	15-09A
4	**641557**	Gasket, lens	15-09A
5	**51804**	Lamp, 3 C.P.	15-08
6	**641609**	Socket and Cable, left	15-09A
	644216	Socket and Cable, right	15-09A
7	**52653**	Nut	15-09A
8	**52705**	Lockwasher	15-09A

	GROUP 15-09B—TAIL AND STOP LIGHT	
640749	**Light, Tail and Stop, Assembly** (Black Door) **(Up to Serial No. 209951)**	1
643726	**Light, Tail and Stop, Assembly** (Chrome Plated Door) **(Use 646594)**	1
646594	**Light, Tail and Stop, Assembly** (Chrome Plated Door) **(After Serial No. 209951, Up to Serial No. .....)**	1

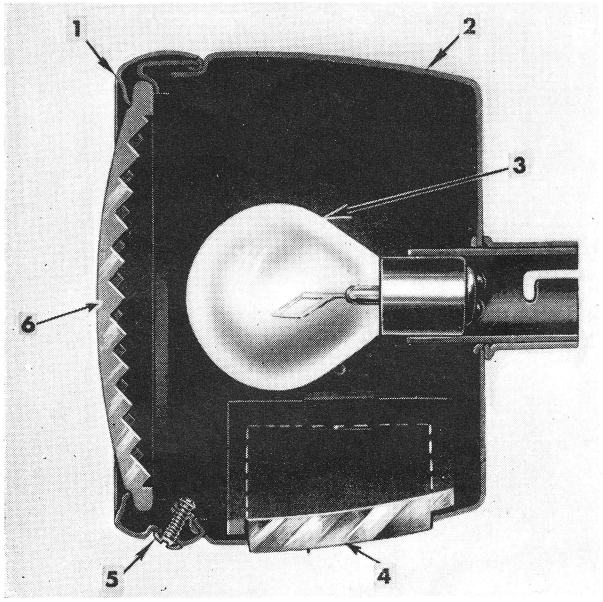

FIG. No. 30—TAIL AND STOP LIGHT

Ref. No.	Part No.	Description	Group No.
1	**643619**	Door	15-09B
2	**647051**	Housing	15-09B
3	**52124**	Lamp (Bulb)	15-09B
4	**640879**	Window, license	15-09B
5	**53729**	Screw, door	15-09B
6	**642232**	Lens	15-09B

Part No.	Description	Quan. Req'd. Per Assy.
	GROUP 15-09B—TAIL AND STOP LIGHT (Continued)	
646918	**Light, Tail and Stop, Assembly (After Serial No. .....)**	1
5790	NUT, hex., ¼"-20 } Tail and stop light to bracket	2
352760	LOCKWASHER, ¼", shakeproof } Tail and stop light to bracket	2
669879	BRACKET, tail and stop light (Mounting base for tail light) **(After Serial No. 209951)**	1
642231	DOOR (Included in 640565) **(Up to Serial No. 45723)**	1
643619	DOOR, tail and stop light (Chrome Plated) **(After Serial No. 45723)**	2
640565	DOOR and LENS, tail and stop light, assembly (Black) **(Up to Serial No. 45723)**	1
643618	DOOR and LENS, tail and stop light, assembly (Chrome Plated) **(After Serial No. 45723)**	2
115543	GASKET, license plate window	1
640866	HOUSING, tail and stop light, assembly **(Up to Serial No. 209951)**	1
646599	HOUSING, tail and stop light, assembly **(After Serial No. 209951, Up to Serial No. .....)**	1
647051	HOUSING, tail and stop light, assembly **(After Serial No. .....)**	1
52124	LAMP, 6-8V, 3 C.P., Type S 8, No. 1158	1
642232	LENS (Included in 640565)	1
640282	PLUG, connecting, tail and stop lamp wire	2
115545	RETAINER, license plate window	3
53729	SCREW, rd. hd., No. 6-32 x 7/16" (Tail and stop light door and window) (1 for door, 2 for window)	3
642233	SPRING, lens retainer (Included in 640565)	3
643365	WASHER, window retainer	2
640879	WINDOW, license plate light	1
	GROUP 15-10—LICENSE TAG BRACKET	
640745	BRACKET, front license tag, assembly	1
50929	BOLT, hex. hd., 5/16"-24 x 7/8" } Front license tag bracket attaching parts	2
5910	NUT, hex., 5/16"-24 } Front license tag bracket attaching parts	2
51833	LOCKWASHER, 5/16" } Front license tag bracket attaching parts	2
	GROUP 15-11—INSTRUMENT PANEL LIGHT	
640284	**Light, Instrument Panel, Assembly (Up to Serial No. 116421)**	1
645177	**Light, Instrument Panel, Assembly (After Serial No. 116421)**	1
640647	NUT, hex., 11/16"-32 } Light to instrument panel	1
53962	LOCKWASHER, 11/16" } Light to instrument panel	1
640645	HOOD, instrument panel light	1
51804	LAMP, 6-8V, 3 C.P., Type G 6, No. 63	1
640641	SHELL and HOOD HOLDER, instrument light, assembly	1
640644	SPRING, instrument light wire lead	1
640643	WASHER, instrument light wire lead spring insulating	1
640642	WIRE, lead, instrument panel, assembly **(Up to Serial No. 116421)**	1
645178	WIRE, lead, instrument panel, assembly **(After Serial No. 116421)**	1
	GROUP 15-11A—HEADLIGHT HIGH BEAM TELL-TALE LIGHT (After Serial No. 32433)	
642982	**Light, Headlight Tell-Tale, Assembly (High Beam)**	1
	Consists of the next four (4) items:	
642983	BEZEL and LENS, headlight tell-tale light	1
642984	HOUSING, headlight tell-tale light	1
53029	LOCKWASHER, 5/16" (Tell-tale light bezel to housing)	1
642985	SOCKET, headlight tell-tale light	1
643016	**Light and Cable, Headlight Tell-Tale, Assembly**	1
637749	INSULATOR, contact tip, tell-tale light	1
52837	LAMP, 6-8V, 1 C.P., Type G-3½, No. 51	1
636729	SPRING, contact tip, tell-tale light	1
635476	TERMINAL, contact, tell-tale light	1
	GROUP 15-12—FOOT DIMMER SWITCH	
640260	**Switch, Headlight Foot Dimmer, Assembly**	1
52131	SCREW, rd. hd., No. 8-32 x 1¼" } Dimmer switch terminal	2
A-1350	LOCKWASHER, No. 8 } Dimmer switch terminal	2
52791	SCREW, rd. hd., ¼"-20 x ½" } Dimmer switch to toe board	2
53058	LOCKWASHER, ¼" } Dimmer switch to toe board	2
	GROUP 15-12A—LIGHTING SWITCH	
641622	**Switch, Lighting, with Circuit Breaker, Knob and Set Screw, Assembly**	1
641626	**Switch, Lighting, less Circuit Breaker and Knob**	1
53695	NUT, mounting, 7/16"-28	1
53696	LOCKWASHER, 7/16" (For mounting nut)	1
A-1349	BREAKER, circuit, thermal (30 amp.)	1
52131	SCREW, rd. hd., No. 8-32 x ¼" } Circuit breaker to switch	2
52705	LOCKWASHER, No. 8 } Circuit breaker to switch	2
641628	KNOB with SET SCREW, light switch, assembly	1
A-5197	SCREW, fil. hd., No. 8-32 x 9/32" } Light switch to terminal	3
A-1350	LOCKWASHER, No. 8 } Light switch to terminal	3
	GROUP 15-12B—INSTRUMENT PANEL LIGHT SWITCH (Up to Serial No. 116421)	
635737	**Switch, Instrument Panel Light, Assembly**	1
5556	SCREW, rd. hd., No. 8-32 x ⅜" } Panel light switch to panel	2
52705	LOCKWASHER, No. 8 } Panel light switch to panel	2

Part No.	Description	Quan. Req'd. Per Assy.
	GROUP 15-13—STARTING SWITCH (CJ-2A)	
A-7225	**Switch, Starting, Assembly** (Int'ch'ble with 647657)	1
A-1565	NUT, hex., 5/16"-24 } Starting switch terminal	2
52428	LOCKWASHER, 5/16" }	2
647657	**Switch, Starting, Assembly** (Int'ch'ble with A-7225)	1
GM-426913	NUT, hex., 5/16"-24 } Terminals to starting switch	2
52428	LOCKWASHER, 5/16" }	2
53842	BOLT, hex. hd., 1/4"-28 x 1/2" } Switch to floor pan	2
52847	NUT, hex., 1/4"-28 }	2
53058	LOCKWASHER, 1/4" }	2
	GROUP 15-13A—STARTING CONTROL (CJ-3A)	
647940	BLOCK, starter rod to dash	1
52142	SCREW, bd. hd., No. 10 x 5/8", tapping (Starter rod block to dash)	2
647939	CLIP, starter rod retracting spring	1
52189	BOLT, hex. hd., 3/8"-16 x 5/8" } Spring clip to flywheel housing and hole plug	2
5010	LOCKWASHER, 3/8" }	2
647941	ROD, starter, assembly	1
52274	WASHER, plain, 5/16" (Starter rod to starting motor)	2
646627	SPRING, retracting, starter control arm	1
	GROUP 15-14—STOP LIGHT SWITCH	
A-1271	**Switch, Stop Light, Assembly (Up to Serial No. 219465)**	1
647801	**Switch, Stop Light, Assembly (After Serial No. 219465)**	1
	GROUP 15-15—JUNCTION BLOCK (Up to Serial No. 47099)	
639599	**Block, Junction, 2-Post, Headlight Wires**	1
52650	SCREW, rd. hd., No. 10-24 x 5/8" } Junction block to fender splasher	2
52651	NUT, hex., No. 10-24 }	2
52221	LOCKWASHER, No. 10 }	2
52994	SCREW, rd. hd., No. 10-32 x 5/16" } Terminal to junction block	2
52221	LOCKWASHER, No. 10 }	2
	(After Serial No. 47099)	
638977	**Block, Junction, 3-Post, Headlight Wires**	1
52606	SCREW, rd. hd., 1/4"-28 x 3/8" } Junction block to fender splasher	2
5914	NUT, hex., 1/4"-28 }	2
52706	LOCKWASHER, 1/4" }	2
6536	NUT, hex., No. 10-32 } Terminal to junction block	3
A-1089	WASHER, 1/4" I.D., 7/16" O.D. }	2
52221	LOCKWASHER, No. 10 }	3
	GROUP 15-17—HORN AND BRACKET	
	Sparks Withington or Schwarze Electric—(CJ-2A) (Up to Serial No. 13908)	
A-1312	**Horn Assembly**	1
A-1389	BRACKET, mounting, horn **(Up to Serial No. 51228)**	1
	SPARKS WITHINGTON—(CJ-2A) (After Serial No. 13908, Up to Serial No. 191720)	
645460	**Horn Assembly** (Int'ch'ble with A-17715)	1
52653	NUT, hex., No. 8-32 } Terminals to horn	2
52652	LOCKWASHER, No. 8 }	2
645462	BRACKET, horn, assembly	1
54026	NUT, hex., No. 12-24 } Horn to bracket	2
53556	LOCKWASHER, No. 12 }	2
	ELECTRIC AUTO-LITE—(CJ-2A) (After Serial No. 13908, Up to Serial No. 191720)	
A-17715	**Horn Assembly** (Int'ch'ble with 645460)	1
52216	NUT, hex., No. 10-32 } Terminals to horn	2
52221	LOCKWASHER, No. 10 }	2
664986	BRACKET, horn, assembly **(After Serial No. 51228, Up to Serial No. 191720)**	1
5920	BOLT, hex. hd., 1/4"-28 x 5/8" } Horn bracket to splash apron	4
5914	NUT, hex., 1/4"-28 }	4
52706	LOCKWASHER, 1/4" }	4
643485	REINFORCEMENT, mounting, horn	1
	SPARKS WITHINGTON—(CJ-2A and CJ-3A) (After Serial No. 191720)	
645895	**Horn Assembly**	1
52653	NUT, hex., No. 8-32 } Horn cable terminals to horn	2
52652	LOCKWASHER, No. 8 }	2
645896	BRACKET, horn, assembly	1
54026	NUT, hex., No. 12-24 } Horn bracket to horn	2
53556	LOCKWASHER, No. 12 }	2
	ELECTRIC AUTO-LITE—(CJ-2A and CJ-3A) (After Serial No. 191720)	
646773	**Horn Assembly**	1

Part No.	Description	Quan. Req'd. Per Assy.
	GROUP 15-17—HORN AND BRACKET (Continued)	
52216	NUT, hex., No. 10-32 } Horn cable terminals to horn	2
52221	LOCKWASHER, No. 10 } Horn cable terminals to horn	2
646313	BRACKET, horn, assembly	1
53905	BOLT, hex. hd., ¼"-28 x ⅝" } Horn bracket to horn	2
53058	LOCKWASHER, ¼" } Horn bracket to horn	2
643485	REINFORCEMENT, mounting, horn	1
	E. A. LABORATORIES, INC.—(CJ-2A and CJ-3A) (After Serial No. 191720)	
648159	**Horn Assembly**	1
52653	NUT, hex., No. 8-32 } Horn cable terminals to horn	2
52652	LOCKWASHER, No. 8 } Horn cable terminals to horn	2
648158	BRACKET, horn, assembly	1
54026	NUT, hex., No. 12-24 } Horn bracket to horn	2
53556	LOCKWASHER, No. 12 } Horn bracket to horn	2
	(Up to Serial No. 51228)—(CJ-2A)	
53068	BOLT, hex. hd., 5/16"-24 x ¾" } Horn mounting bracket to dash	2
GM-446362	WASHER, plain, 5/16" } Horn mounting bracket to dash	2
53047	LOCKWASHER, 5/16" } Horn mounting bracket to dash	2
	(After Serial No. 51228)—(CJ-2A and CJ-3A)	
5920	BOLT, hex. hd., ¼"-28 x ⅝" } Horn bracket to front fender splash apron	2
5914	NUT, hex., ¼"-28 } Horn bracket to front fender splash apron	2
5121	WASHER, plain, ¼" } Horn bracket to front fender splash apron	2
52706	LOCKWASHER, ¼" } Horn bracket to front fender splash apron	2
	GROUP 15-17A—HORN BUTTON AND WIRING	
	Note: For wiring not listed see body wiring group.	
A-634	**Button, Horn**	1
A-302	BRUSH, contact, horn wire **(Up to Serial No. 178361)**	1
53633	SCREW, rd. hd., No. 8-32 x ¼" (Horn contact brush to column) **(Up to Serial No. 178361)**	2
A-752	CABLE, horn, assembly **(Up to Serial No. 178361)**	1
645741	CABLE, horn, assembly **(After Serial No. 178361)**	1
A-5081	CABLE, horn to junction block	1
638885	CUP, horn button spring	1
A-751	FERRULE, insulating	1
A-633	NUT, horn button (also steering wheel nut)	1
A-747	RING, horn contact, assembly	1
638884	SPRING, horn button	1
A-750	WASHER, horn contact	1
	GROUP 15-18—BATTERY SUPPORT	
640188	**Support, Battery, Assembly**	1
52624	RIVET, fl. hd., 5/16" x ¾" (Support to frame)	8
5267	RIVET, rd. hd., 5/16" x ¾" (Support to frame and motor support)	3
656162	BOLT, clamp, battery hold down frame, assembly	2
300329	NUT, wing, 5/16"-18 **(Use 669031)** } Battery clamp bolt	2
669031	NUT, wing, 5/16"-18 } Battery clamp bolt	2
52768	WASHER, flat, 21/64" hole } Battery clamp bolt	2
51833	LOCKWASHER, 5/16" } Battery clamp bolt	2
640201	FRAME, battery hold down, assembly **(Up to Serial No. 215649)**	1
647107	FRAME, battery hold down, assembly **(After Serial No. 215649)**	1
640192	STRAP, battery hold down frame to fender **(Up to Serial No. 215649)**	1
663678	NUT, wing, 5/16"-18 **(Use 669031)** } Battery strap to fender	1
669031	NUT, wing, 5/16"-18 } Battery strap to fender	1
52768	WASHER, flat, 21/64" hole } Battery strap to fender	1
53047	LOCKWASHER, 5/16" } Battery strap to fender	1
	GROUP 15-18A—BATTERY CABLES	
323397	BOLT, battery clamp	2
A-9093	BOLT and NUT, battery clamp, assembly	2
640258	CABLE, positive, battery to starting switch, assembly (CJ-2A)	1
648098	CABLE, positive, battery to starting switch, assembly (23" long) (CJ-3A) **(Use 648696)**	1
648696	CABLE, positive, battery to starting switch, assembly (CJ-3A)	1
640259	CABLE, starting switch to starting motor, assembly	1
78932	CLIP, ⅝", for starter switch cable	2
5113	SCREW, rd. hd., No. 10-24 x ½" } For starter switch cable clip	1
6352	NUT, hex., No. 10-24 } For starter switch cable clip	1
52221	LOCKWASHER, No. 10 } For starter switch cable clip	1
A-9094	NUT, battery clamp bolt	2
640257	STRAP, battery ground	1
50151	BOLT, hex. hd., ⅜"-24 x ⅞" } Battery ground strap to frame	1
5901	NUT, hex., ⅜"-24 } Battery ground strap to frame	1
53026	LOCKWASHER, ⅜" } Battery ground strap to frame	2
A-1098	STRAP, engine ground	1

Part No.	Description	Quan. Req'd. Per Assy.
	GROUP 15-18A—BATTERY CABLES (Continued)	
50163	BOLT, hex. hd., 3/8"-24 x 3/4" (Engine ground strap to frame (CJ-2A))	1
5901	NUT, hex., 3/8"-24 (Engine ground strap to frame (CJ-2A))	1
5010	LOCKWASHER, 3/8" (Under Bolt Head) (Engine ground strap to frame (CJ-2A))	1
53026	LOCKWASHER, 3/8", int. and ext. (Engine ground strap to frame (CJ-2A))	2
53025	LOCKWASHER, 5/16", int. and ext. (Engine ground strap under engine insulator mounting bolt head) (CJ-2A)	2
5919	BOLT, hex. hd., 3/8"-24 x 1" (Engine ground strap to frame (CJ-3A))	1
5901	NUT, hex., 3/8"-24 (Engine ground strap to frame (CJ-3A))	1
5010	LOCKWASHER, 3/8" (Under Bolt Head) (Engine ground strap to frame (CJ-3A))	1
53026	LOCKWASHER, 3/8", int. and ext. (Engine ground strap to frame (CJ-3A))	2
53025	LOCKWASHER, 5/16", int. and ext. (Engine ground strap under engine insulator mounting bolt head) (CJ-3A)	2
371400	TERMINAL, 11/32" (For cable 640259)	3
372668	TERMINAL, battery clamp	1
648692	TERMINAL, battery positive cable (CJ-3A)	1
	GROUP 15-19—REFLEX REFLECTOR	
	(Up to Serial No. 67921)	
640008	**Reflector, Reflex, Assembly** (Black) **(Use 643897)**	1
52834	SCREW, rd. hd., 1/4"-28 x 1/2" (Reflector to body)	2
5914	NUT, hex., 1/4"-28 (Reflector to body)	2
52706	LOCKWASHER, 1/4" (Reflector to body)	2
	(After Serial No. 67921)	
643897	**Reflector, Reflex, Assembly** (Chrome)	1
54119	SCREW, rd. hd., 1/4"-28 x 1/2" (Reflector to body)	2
5914	NUT, hex., 1/4"-28 (Reflector to body)	2
52706	LOCKWASHER, 1/4" (Reflector to body)	2
	GROUP 16—INSTRUMENTS	
	GROUP 16-01—AMMETER	
640761	**Ammeter Assembly**	1
A-17647	BRACKET, mounting, ammeter	1
52216	NUT, hex., No. 10-32 (Ammeter to bracket)	4
A-8129	LOCKWASHER, No. 10 (Ammeter to bracket)	2
	GROUP 16-02—HEAT INDICATOR	
	Electric Auto-Lite	
640762	**Gauge, Heat Indicator, Assembly** (Int'ch'ble with 647886)	1
52216	NUT, hex., No. 10-32 (Gauge to bracket)	2
A-8129	LOCKWASHER, No. 10 (Gauge to bracket)	2
A-8131	BRACKET, mounting, heat indicator	1
A-17160	BUSHING, reducing, heat indicator gauge plug to cylinder head	1
662420	GROMMET, heat indicator gauge tube thru dash	1
	Stewart-Warner	
647886	**Gauge, Heat Indicator, Assembly** (Int'ch'ble with 640762)	1
52216	NUT, hex., No. 10-32 (For mounting gauge)	2
53381	LOCKWASHER, No. 10 (For mounting gauge)	2
647888	BRACKET, mounting, heat indicator	1
647889	BUSHING, reducing	1
	GROUP 16-03—FUEL GAUGES	
640763	**Gauge, Fuel, Assembly (Dash Unit)**	1
640694	**Gauge, Fuel, Assembly (Tank Unit)**	1
5556	SCREW, rd. hd., No. 8-32 x 3/8" (Fuel gauge to tank)	5
52705	LOCKWASHER, No. 8 (Fuel gauge to tank)	5
5253	SCREW, rd. hd., No. 8-32 x 1/4" (Fuel gauge wire to tank unit)	1
52705	LOCKWASHER, No. 8 (Fuel gauge wire to tank unit)	1
A-8132	BRACKET, mounting, fuel gauge to dash	1
52216	NUT, hex., No. 10-32 (Fuel gauge to mounting bracket)	4
A-8129	LOCKWASHER, No. 10 (Fuel gauge to mounting bracket)	2
A-1293	GASKET, fuel gauge tank unit	1
	GROUP 16-03A—OIL GAUGE	
	(Electric Auto-Lite)	
640764	**Gauge, Oil Pressure, 80-Lb., Assembly** (Int'ch'ble with 647058 and 647890)	1
52216	NUT, hex., No. 10-32 (Gauge to bracket)	2
A-8129	LOCKWASHER, No. 10 (Gauge to bracket)	2
A-8131	BRACKET, mounting, oil gauge	1
	(United States)	
647058	**Gauge, Oil Pressure, Assembly** (Int'ch'ble with 640764 and 647890)	1
52216	NUT, hex., No. 10-32 (For mounting gauge)	2
53381	LOCKWASHER, No. 10 (For mounting gauge)	2
647087	BRACKET, mounting, oil gauge	1

Part No.	Description	Quan. Req'd Per Assy.
	GROUP 16-03A—OIL GAUGE (Continued)	
	(Stewart-Warner)	
647890	**Gauge, Oil Pressure, Assembly** (Int'ch'ble with 640764 and 647058)	1
52216	NUT, hex., No. 10-32 } For mounting gauge {	2
53381	LOCKWASHER, No. 10 }	2
647892	BRACKET, mounting, oil gauge	1
647893	COUPLING, female, ¼" tube	1
	GROUP 16-04—SPEEDOMETER	
640131	**Speedometer Assembly (Miles)**	1
642141	**Speedometer Assembly (Kilos)**	1
A-8127	NUT, wing, No. 10-32 } Speedometer to bracket } **Use with Auto-Lite Speedometer** {	2
A-8129	LOCKWASHER, 3/16" }	2
A-8125	NUT, wing, No. 10-32 } Speedometer to bracket } **Use with King-Seeley Speedometer** {	2
53194	LOCKWASHER, No. 10 }	2
A-8128	BRACKET, mounting, speedometer **(Use with Auto-Lite Speedometer)**	1
A-8126	BRACKET, mounting, speedometer **(Use with King-Seeley Speedometer)**	1
345961	BUSHING, rubber, 13/32" (Speedometer cable thru dash)	1
A-985	BUSHING, speedometer drive pinion	1
A-5449	CLIP, speedometer cable to dash	1
5064	SCREW, rd. hd., No. 10-24 x ⅝" } Clip to dash {	1
52221	LOCKWASHER, No. 10 }	1
A-1511	GEAR, speedometer drive (4 teeth)	1
A-5707	GEAR, speedometer driven (15 teeth)	1
A-1344	SHAFT, speedometer tube	1
636396	SLEEVE, speedometer driven gear	1
A-1343	TUBE, speedometer	1
A-1267	TUBE and SHAFT, speedometer, assembly	1

GROUP 17—TRANSMISSION

GROUP 17-01—TRANSMISSION AND CASE

640122	**Transmission Assembly (For Remote Control) (Up to Serial No. 24196) (Use 1 each 641730, 644122 and A-15428)**	1
641730	**Transmission Assembly (For Remote Control) (After Serial No. 24196, Up to Serial No. 38221)**	1
644317	**Transmission Assembly (For Remote Control) (After Serial No. 38221) (Use with 644318 Transfer Case using 644316 Lock Plate)**	1
644315	**Transmission Assembly (For Cane Shift Control) (Use with 644318 Transfer Case using 644316 Lock Plate)**	1
	With each transmission assembly use (1) Gasket 640351 to replace gasket under main bearing retainer and (3) 51875 gaskets to be placed under head of main bearing retaining screws.	
A-870	BREATHER, transmission case, assembly	1
640371	CASE and PLUG, transmission, assembly—**Up to Serial No. 24196**	1
642819	CASE, transmission, assembly—**After Serial No. 24196—Up to Serial No. 38221**	1
642754	CASE, transmission, assembly (Cane type gearshift)—**After Serial No. 38221**	1
640890	COVER and OIL BAFFLE, transmission case, assembly **(Up to Serial No. 24196)**	1
642821	COVER, transmission case—**After Serial No. 24196—Up to Serial No. 38221**	1
51485	BOLT, hex-hd., 5/16"-18 x ⅝", (cover to case)	6
640437	GASKET, transmission case cover	1
51875	GASKET, transmission case cover bolt	6
5140	PLUG, pipe, ½" sq. hd. (Filler and drain plug)	2
640373	PLUG, taper, transmission case	1

GROUP 17-02—TRANSMISSION MAIN DRIVE GEAR

640428	**Gear, Transmission Main Drive**	1
643721	BEARING, transmission main drive gear	1
51875	GASKET, bearing retainer bolt	3
640351	GASKET, main drive gear bearing retainer	1
640892	OIL SEAL, transmission main drive gear bearing retainer **(Use 645980)**	1
645980	OIL SEAL, transmission main drive gear bearing retainer (Rubber and Felt)	1
640422	RETAINER, transmission main drive gear bearing	1
53811	BOLT, socket hd., 5/16"-18 x 1" (Bearing retainer)	3
640783	SNAP RING, main drive gear (.086-.088 thk.)	As req'd
640784	SNAP RING, main drive gear (.089-.091 thk.)	As req'd
640785	SNAP RING, main drive gear (.092-.094 thk.)	As req'd
640894	SNAP RING, main drive gear (.096-.098 thk.)	As req'd
640782	SNAP RING, main drive gear bearing, .0625 thick	1
640893	WASHER, oil retaining, front	1

GROUP 17-03—TRANSMISSION MAIN SHAFT AND GEARS

640390	**Shaft, Transmission Main**	1
640403	ADAPTER, transmission main shaft bearing (For transmission 640122 and 641730)	1
644552	ADAPTER, transmission main shaft bearing (For transmission 644315 and 644317)	1
A-916	BEARING, transmission main shaft, rear end	1
644551	BEARING, transmission main shaft, rear end (For transmission 644315 and 644317)	1
640400	BUSHING, transmission main shaft, second speed gear	1
640401	GEAR, sliding, transmission main shaft, low and reverse	1

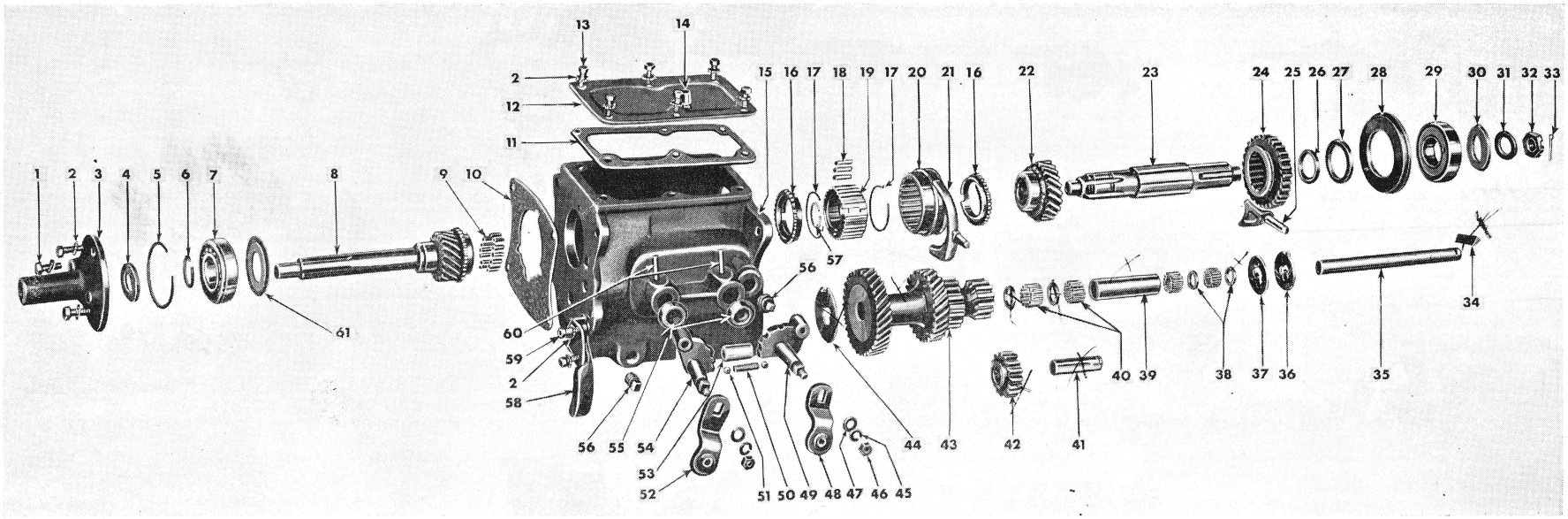

FIG. No. 31—TRANSMISSION **(Up to Serial No. 38221)**

Ref. No.	Part No.	Description	Group No.
1	**53811**	Bolt, retainer	17-02
2	**51875**	Gasket, retainer bolt	17-02
3	**640422**	Retainer, M. D. gear bearing	17-02
4	**645980**	Oil Seal, retainer	17-02
5	**640782**	Snap Ring, bearing	17-02
6	**640783**	Snap Ring, M. D. gear, .086″	17-02
	640784	Snap Ring, M. D. gear, .089″	17-02
	640785	Snap Ring, M. D. gear, .092″	17-02
	640894	Snap Ring, M. D. gear, .096″	17-02
7	**643721**	Bearing, M. D. gear	17-02
8	**640428**	Gear, main drive	17-02
9	**640786**	Roller, pilot bearing	17-03
10	**640351**	Gasket, bearing retainer	17-02
11	**640437**	Gasket, cover	17-01
12	**642821**	Cover, transmission	17-01
13	**51485**	Bolt, cover to case	17-01
14	**A-870**	Breather, cover	17-01
15	**642819**	Case, transmission	17-01
16	**640397**	Ring, blocking	17-03
17	**640394**	Spring, synchronizer	17-03
18	**640395**	Plate, shifting	17-03
19	**640393**	Hub, clutch	17-03
20	**640396**	Sleeve, clutch	17-03
21	**640374**	Fork, shifting	17-06
22	**640398**	Gear, second speed	17-03
23	**640390**	Shaft, main	17-03
24	**640401**	Gear, low and reverse	17-03
25	**640378**	Shoe, low and reverse	17-06
26	**640402**	Spacer, bearing (Old type)	17-03
27	**643621**	Spacer, bearing (Later type)	17-03
28	**644552**	Adapter, bearing	17-03
29	**644551**	Bearing, rear end	17-03
30	**A-410**	Washer, oil retaining	17-03
31	**A-1410**	Washer, main shaft nut	17-03
32	**A-520**	Nut, main shaft	17-03
33	**5397**	Pin, cotter	17-03
34	**644316**	Plate, countershaft lock	17-05
35	**640412**	Countershaft	17-05
36	**640411**	Washer, countershaft, rear	17-05
	640779	Washer, countershaft, rear	17-05
37	**640410**	Washer, countershaft, rear, bronze	17-05
38	**640778**	Spacer, countershaft, bearing	17-05
39	**640408**	Spacer, countershaft, bearing, long	17-05
40	**640777**	Rollers, countershaft, bearing	17-05
41	**640420**	Shaft, reverse gear	17-04
42	**640417**	Gear, reverse idler	17-04
43	**640405**	Gear, countershaft	17-05
44	**640409**	Washer, countershaft thrust, front	17-05
45	**52045**	Lockwasher	17-06
46	**52850**	Nut, lever to shaft	17-06
47	**638003**	Washer, control lever	17-06
48	**640387**	Lever, outer, low and reverse	17-06
49	**647869**	Lever, shift, low and reverse	17-06
50	**640538**	Spring, poppet	17-06
51	**635838**	Ball, poppet	17-06
52	**643701**	Lever, outer, high and intermediate	17-06
53	**640441**	Sleeve, interlock, 1.299″ long	17-06
	640442	Sleeve, interlock, 1.295″ long	17-06
	640443	Sleeve, interlock, 1.291″ long	17-06
	640444	Sleeve, interlock, 1.287″ long	17-06
	641310	Sleeve, interlock, 1.303″ long	17-06
54	**640375**	Lever, shift, high and intermediate	17-06
55	**640383**	Oil Seal, shift lever	17-06
56	**5140**	Plug, drain and filler	17-01
57	**640431**	Snap Ring, clutch hub	17-03
58	**640413**	Collector, oil	17-05
59	**640416**	Screw, oil collector	17-05
60	**6298**	Pin, taper, shift shaft	17-06
61	**640893**	Washer, oil retaining	17-02

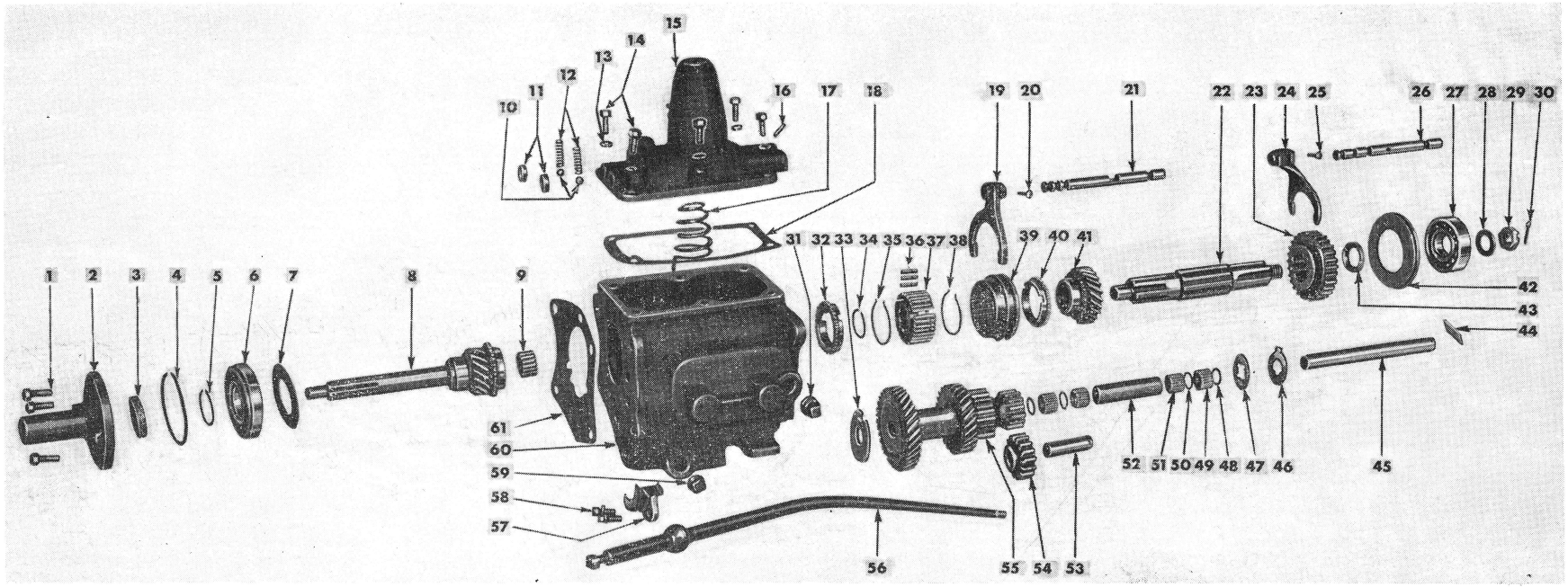

FIG. No. 32—TRANSMISSION **(CJ-2A After Serial No. 38221 and All CJ-3A)**

Ref. No.	Part No.	Description	Group No.
1	**53811**	Bolt, bearing retainer	17-02
2	**640422**	Retainer, bearing	17-02
3	**645980**	Oil Seal, bearing retainer	17-02
4	**640782**	Snap Ring, bearing	17-02
5	**640783**	Snap Ring, M. D. gear	17-02
6	**643721**	Bearing, M. D. gear	17-02
7	**640893**	Washer, bearing, front	17-02
8	**640428**	Gear, main drive	17-02
9	**640786**	Roller, pilot bearing	17-03
10	**5599**	Ball, poppet	17-06A
11	**642757**	Cap, shift rail	17-06A
12	**642769**	Spring, poppet	17-06A
13	**52045**	Lockwasher	17-06B
14	**635868**	Bolt, control housing	17-06B
15	**642755**	Housing, control	17-06B
16	**642758**	Plunger, interlock	17-06A
17	**642763**	Spring, control lever	17-06B
18	**642770**	Gasket, control housing	17-06B
19	**642766**	Fork, high and intermediate	17-06A
20	**642768**	Pin, shift fork	17-06A
21	**642764**	Rail, high and intermediate	17-06A
22	**640390**	Shaft, main	17-03
23	**640401**	Gear, sliding	17-03
24	**642767**	Fork, low and reverse	17-06A
25	**642768**	Pin, shift fork	17-06A
26	**642765**	Rail, low and reverse	17-06A
27	**644551**	Bearing, rear	17-03
28	**A-1410**	Washer, main shaft	17-03
29	**A-520**	Nut, main shaft	17-03
30	**5397**	Pin, cotter	17-03
31	**5140**	Plug, filler	17-01
32	**640397**	Ring, blocking	17-03
33	**640409**	Washer, countershaft, front	17-05
34	**640431**	Snap Ring, clutch hub	17-03
35	**640394**	Spring, synchronizer	17-03
36	**640395**	Plate, synchronizer	17-03
37	**640393**	Hub, clutch	17-03
38	**640394**	Spring, synchronizer	17-03
39	**640396**	Sleeve, clutch	17-03
40	**640397**	Ring, blocking	17-03
41	**640398**	Gear, second speed	17-03
42	**644552**	Adapter, bearing, rear	17-03
43	**643621**	Spacer, bearing	17-03
44	**644316**	Plate, lock	17-05
45	**640412**	Countershaft	17-05
46	**640411**	Washer, countershaft, rear	17-05
47	**640410**	Washer, countershaft, rear	17-05
48	**640778**	Spacer, countershaft bearing	17-05
49	**640777**	Rollers, countershaft bearing	17-05
50	**640778**	Spacer, countershaft bearing	17-05
51	**640777**	Rollers, countershaft bearing	17-05
52	**640408**	Spacer, countershaft bearing	17-05
53	**640420**	Shaft, reverse gear	17-04
54	**640417**	Gear, reverse idler	17-04
55	**640405**	Gear, countershaft	17-05
56	**648593**	Lever, control	17-06B
57	**640413**	Collector, oil	17-05
58	**640416**	Screw, oil collector	17-05
59	**5140**	Plug, drain	17-01
60	**642754**	Case, transmission	17-01
61	**640351**	Gasket, bearing retainer	17-02

Part No.	Description	Quan. Req'd. Per Assy.
	GROUP 17-03—TRANSMISSION MAIN SHAFT AND GEARS (Continued)	
640398	GEAR, transmission main shaft, second speed, assembly	1
640393	HUB, clutch, intermediate and high	1
A-520	NUT, transmission main shaft	1
A-15428	OIL SEAL, transmission main shaft—**Up to Serial No. 24196**	1
5397	PIN, cotter, main shaft nut	1
640395	PLATE, shifting, synchronizer	3
640397	RING, blocking, synchronizer	2
640786	ROLLER, pilot bearing, transmission main shaft	14
640396	SLEEVE, clutch, intermediate and high speed	1
640431	SNAP RING, intermediate and high clutch hub (.086-.088 thk.)	1
640402	SPACER, transmission main shaft bearing—**Up to Serial No. 24196**	1
643621	SPACER, transmission main shaft bearing—**After Serial No. 24196—Up to Serial No. 38221**	1
640394	SPRING, transmission synchronizer	2
640392	SYNCHRONIZER UNIT, transmission, assembly	1
640391	SYNCHRONIZER UNIT and blocking RING, transmission, assembly	1
A-410	WASHER, oil retaining, transmission main shaft	1
A-1410	WASHER, transmission main shaft	1
	GROUP 17-04—TRANSMISSION REVERSE IDLER GEAR	
640417	**Gear, Reverse Idler, Assembly**	1
640419	BUSHING, reverse idler gear	1
640420	SHAFT, reverse idler gear	1
	GROUP 17-05—TRANSMISSION COUNTERSHAFT AND GEARS	
640412	**Countershaft, Transmission**	1
640413	COLLECTOR, oil, countershaft gear, assembly	1
640416	SCREW, socket hd., 5/16"-24, Allen Type (Oil collector to case)	2
51875	GASKET, oil collector to transmission screw	2
640405	GEAR, cluster, transmission countershaft	1
640421	PLATE, lock, idler and countershaft **(Up to Serial No. 67494)**	1
644316	PLATE, lock, idler and countershaft **(After Serial No. 67494)** (For transmission 644315 and 644317)	1
640777	ROLLERS, transmission countershaft gear bearing	88
640408	SPACER, countershaft gear bearing, long	1
640778	SPACER, countershaft gear bearing, short	4
640409	WASHER, thrust, transmission countershaft, front (steel backed bronze)	1
640411	WASHER, thrust, transmission countershaft, rear (steel)	1
640779	WASHER, thrust, transmission countershaft, rear (steel, .0555 thick)	As req'd.
640410	WASHER, thrust, transmission countershaft, rear (steel backed bronze, .0625 thick)	As req'd.
	GROUP 17-06—TRANSMISSION SHIFT PARTS (Up to Serial No. 38221)	
635838	BALL, poppet, transmission shift lever (5/16")	2
640374	FORK, transmission shift, high and intermediate	1
640384	LEVER, control, high and intermediate, outer, assembly **(Up to Serial No. 24196)**	1
643701	LEVER, control, high and intermediate, outer, assembly **(After Serial No. 24196, Up to Serial No. 38221)**	1
640387	LEVER, control, low and reverse, outer, assembly	1
52850	NUT, hex., 5/16"-18 } Control lever to shaft {	2
52045	LOCKWASHER, 5/16" }	2
640375	LEVER, shift, high and intermediate, assembly	1
640379	LEVER, shift, low and reverse, assembly **(Use 647869)**	1
647869	LEVER, shift, low and reverse, assembly	1
640383	OIL SEAL, transmission shift shaft	2
6298	PIN, taper, No. 0 (Transmission shift shaft)	2
640378	SHOE, shifting, low and reverse	1
640444	SLEEVE, interlock, shift lever (1.287 long)	As req'd
640443	SLEEVE, interlock, shift lever (1.291 long)	As req'd
640442	SLEEVE, interlock, shift lever (1.295 long)	As req'd
640441	SLEEVE, interlock, shift lever (1.299 long)	As req'd
641310	SLEEVE, interlock, shift lever (1.303 long)	As req'd
640538	SPRING, poppet, transmission shift lever	1
638003	WASHER, transmission control lever	2
	GROUP 17-06A—TRANSMISSION SHIFT PARTS (Cane Type Gearshift)—After Serial No. 38221	
5599	BALL, poppet, shift rail (3/8")	2
642757	CAP, transmission shift rail	2
642766	FORK, shift, high and intermediate	1
642767	FORK, shift, low and reverse	1
642768	PIN, shift fork	2
642759	PLUG, taper, 3/8 in. (Interlock plunger hole)	1
642758	PLUNGER, interlock, transmission gear shift	1
642764	RAIL, shift, high and intermediate	1
642765	RAIL, shift, low and reverse	1
642769	SPRING, poppet, shift rail	2

Part No.	Description	Quan. Req'd. Per Assy.
	GROUP 17-06B—CONTROL LEVER AND HOUSING (Cane Type Gearshift)—After Serial No. 38221	
A-971	BALL, control lever—**Up to Serial No. 77758**	1
644233	BALL, gearshift lever—**After Serial No. 77758**	1
642761	BALL, fulcrum, control lever (Included with 643916)	1
642770	GASKET, control housing	1
642755	HOUSING, control, transmission	1
635868	BOLT, hex. hd., 5/16"-18 x 7/8" } Control housing to transmission	6
52045	LOCKWASHER, 5/16" } Control housing to transmission	6
643916	LEVER, control, transmission gearshift **(Use 648593)**	1
648593	LEVER, control, transmission gearshift	1
642762	PIN, 3/16" x 37/64" (Fulcrum ball to lever) (Included with 643916)	1
642763	SPRING, support, control lever	1

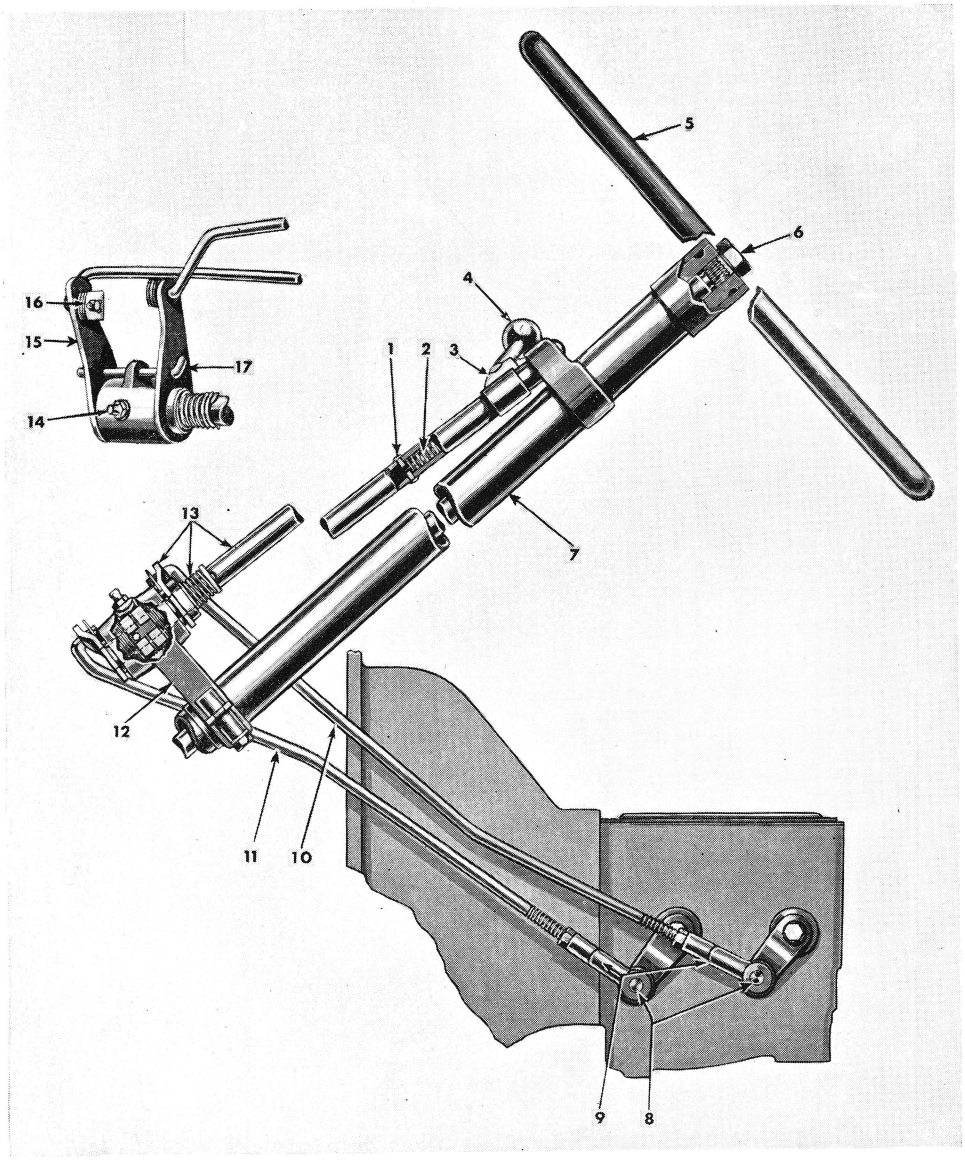

FIG. No. 33—REMOTE CONTROL GEARSHIFT **(Up to Serial No. 38221)**

Ref. No.	Part No.	Description	Group No.
1	**51904**	Screw, stop	17-07
2	**639297**	Spring, bias	17-07
3	**642979**	Lever, gearshift	17-07
4	**639647**	Ball, lever	17-07
5	**641970**	Wheel, steering	23-04
6	**A-633**	Nut, horn button	15-17A
7	**645739**	Column and Bearing	23-02
8	**375070**	Pin, clevis	17-07
9	**53654**	Yoke, shift rod	17-07
10	**640612**	Rod, shift	17-07
11	**640613**	Rod, shift	17-07
12	**640604**	Bracket, cross shift	17-07
13	**640608**	Shaft, control	17-07
14	**640038**	Fitting, lubricating	17-07
15	**640611**	Lever and Clutch	17-07
16	**638010**	Anti-rattler	17-07
17	.....	Not Supplied	

Part No.	Description	Quan. Req'd. Per Assy.
	GROUP 17-07—TRANSMISSION REMOTE CONTROL (Up to Serial No. 38221)	
638010	ANTI-RATTLER, remote control shift rod	2
639647	BALL, remote control lever	1
640604	BRACKET and CAP, remote control cross shift	1
51487	BOLT, hex. hd., 5/16"-18 x 1 3/4" } Cap to bracket	2
51833	LOCKWASHER, 5/16" } Cap to bracket	2
638037	PIN, dowel, 3/16" x 9/32" (Bracket to steering column)	1
640605	COLUMN and BEARING, steering gear, assembly	1
640616	COLUMN with REMOTE CONTROL SHAFT, steering, assembly	1
640038	FITTING, hydraulic lubricating, straight, 1/8" pipe thd. **(Up to Serial No. 11825)**	1
392909	FITTING, lubricating, 1/8" pipe thd. **(After Serial No. 11825)**	1
640386	INSULATOR, remote control shift rod	1
50768	KEY, Woodruff, 3/16" x 7/8"	1
642979	LEVER, remote control (gearshift lever)	1
640611	LEVER and CLUTCH, remote control, second and high, assembly	1
375070	PIN, clevis, shift rod to transmission lever	2
52967	PIN, cotter, 3/32" x 5/8"	4
A-588	PIN, fulcrum, remote control lever **(Use 637628)**	1
637628	PIN, fulcrum, remote control lever	1
A-589	SCREW, rd. hd., No. 12-24 x 7/16" **(Use 52913)** } Remote control lever fulcrum pin	1
52913	SCREW, rd. hd., No. 12-24 x 7/16" } Remote control lever fulcrum pin	1
51969	LOCKWASHER, No. 12 } Remote control lever fulcrum pin	1
51921	PLUG, expansion, 3/4" (For control shift lever at bottom of control shaft)	1
640612	ROD, shift, remote control, first and reverse, assembly	1
640613	ROD, shift, remote control, second and high, assembly	1
52967	PIN, cotter, 3/32" x 5/8" (Rod to steering gear lever)	2
51904	SCREW, rd. hd., No. 6 x 5/16", drive	2
640608	SHAFT, remote control, assembly	1
5137	PIN, cotter, 1/8" x 1" (Washer to control shaft)	1
637748	SPRING, anti-rattle, remote control lever	1
639297	SPRING, bias, remote control cross shift	1
53654	YOKE END, adjusting, 5/16" (Remote control shift rod)	2
5910	NUT, hex., 5/16"-24 (Yoke lock)	2
	GROUP 17-08—TRANSMISSION ATTACHING PARTS	
640351	GASKET, transmission to flywheel housing	1
640129	GASKET, transmission to transfer case **(Up to Serial No. 24196) (Use 644122)**	1
641731	GASKET, transmission to transfer case **(After Serial No. 24196) (Use 644122)**	1
644122	GASKET, transmission to transfer case **(After Serial No. 67494)**	1
6606	BOLT, hex. hd., 3/8"-24 x 1 1/8" } Flywheel housing to engine plate	4
52379	BOLT, hex. hd., 3/8"-24 x 1 5/8" } Flywheel housing to engine plate	2
630101	BOLT, dowel, 3/8"-24 x 2 1/8" } Flywheel housing to engine plate	2
5901	NUT, hex., 3/8"-24 } Flywheel housing to engine plate	9
5010	LOCKWASHER, 3/8" } Flywheel housing to engine plate	9
6184	BOLT, hex. hd., 7/16"-14 x 1 1/4" } Transmission to flywheel housing	4
5059	LOCKWASHER, 7/16" } Transmission to flywheel housing	4

GROUP 18—TRANSFER CASE

GROUP 18-01—TRANSFER CASE ASSEMBLY

641729	**Case, Transfer, Assembly (Use 644318)**	1
644318	**Case, Transfer, Assembly**	1
A-7445	OIL SEAL SET, transfer case	1
	Consists of:	
A-958	2 OIL SEAL, output shaft	
A-974	2 OIL SEAL, shift rod	

GROUP 18-02—TRANSFER CASE

640299	**Case, Transfer (Up to Serial No. 24196)**	1
642187	**Case, Transfer (Use 644319)**	1
644319	**Case, Transfer (After Serial No. 67494)**	1
A-934	BREATHER, transfer case, assembly	1
A-956	CAP, bearing, output clutch shaft, front	1
A-1136	BOLT, hex. hd., 3/8"-16 x 1" } Bearing cap to transfer case	5
A-1135	WASHER, flat, 3/8" } Bearing cap to transfer case	5
A-9330	CAP and BUSHING, bearing, output shaft, rear, assembly	1
A-9336	BOLT, hex. hd., 3/8"-16 x 5/8" } Rear bearing cap and brake backing plate to case	1
A-1136	BOLT, hex. hd., 3/8"-16 x 1" } Rear bearing cap and brake backing plate to case	1
A-9337	BOLT, hex. hd., 3/8"-16 x 2 1/4" } Rear bearing cap and brake backing plate to case	1
A-9334	BOLT, hex. hd., 3/8"-16 x 2 1/2" } Rear bearing cap and brake backing plate to case	2
A-1135	WASHER, flat, 3/8" } Rear bearing cap and brake backing plate to case	4
A-953	COVER, transfer case, bottom, assembly	1
51485	BOLT, hex. hd., 5/16"-18 x 5/8" } Bottom cover to case	10
51833	LOCKWASHER, 5/16" } Bottom cover to case	10
A-1508	COVER, transfer case, rear	1

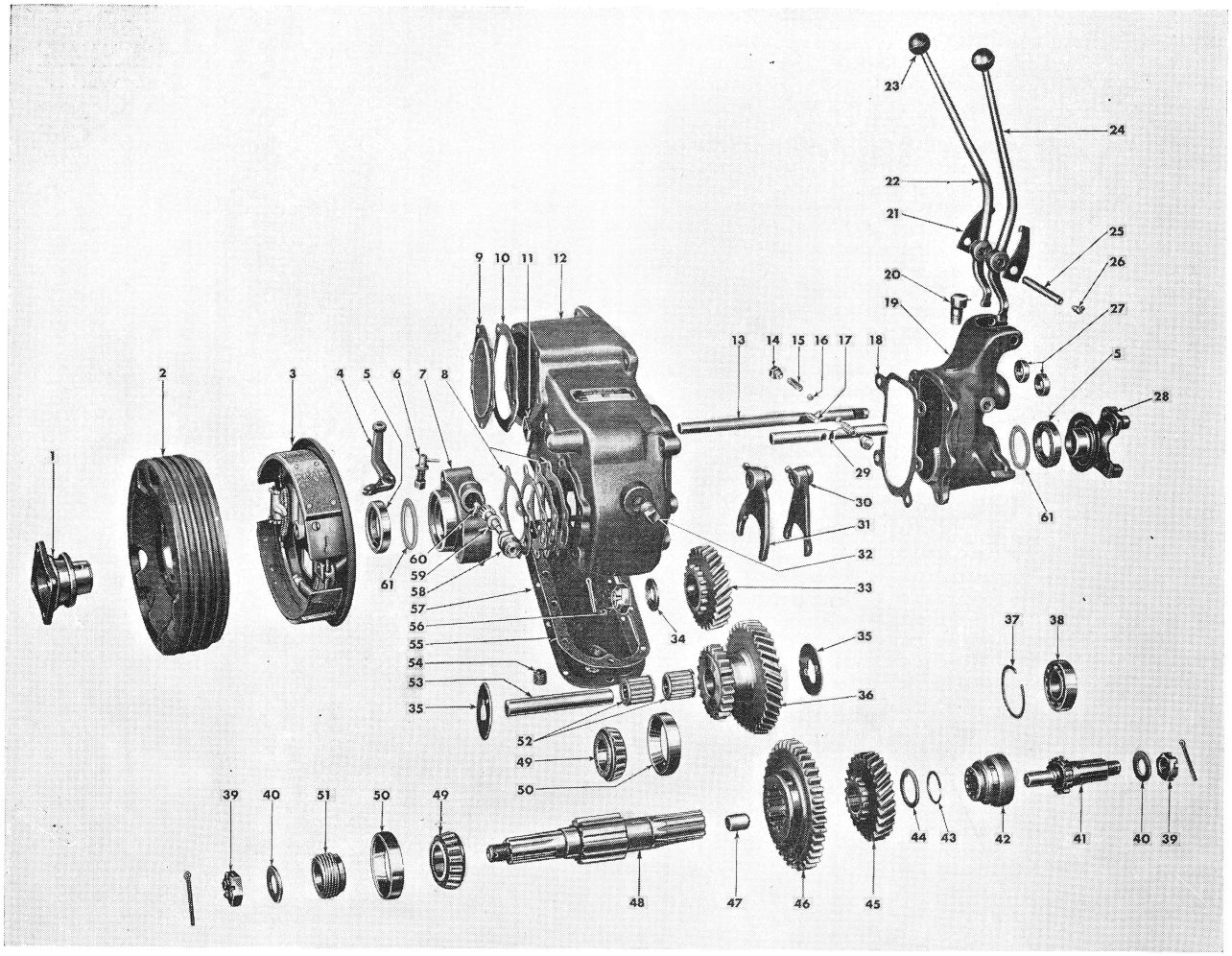

FIG. No. 34—TRANSFER CASE

Ref. No.	Part No.	Description	Group No.
1	**116714**	Flange, companion	18-04
2	**A-9332**	Drum, brake	24-01
3	**642776**	Brake, emergency	24-01
4	**A-17254**	Lever, operating	24-01
5	**A-958**	Oil Seal, bearing cap	18-04
6	**A-9339**	Stud, operating lever	24-01
7	**A-9330**	Cap, rear	18-02
8	**A-982**	Shim, rear cap, .003″	18-02
	A-983	Shim, rear cap, .010″	18-02
	A-984	Shim, rear cap, .031″	18-02
9	**A-1508**	Cover, rear	18-02
10	**A-1509**	Gasket, rear cover	18-02
11	**A-1001**	Plate, lock	18-05
12	**644319**	Case, transfer	18-02
13	**A-1504**	Rod, shift, underdrive	18-07
14	**A-967**	Plug, poppet	18-07
15	**A-966**	Spring, poppet	18-07
16	**5599**	Ball, poppet	18-07
17	**A-965**	Interlock, shift rod	18-07
18	**A-957**	Gasket, front cap	18-02
19	**A-956**	Cap, front	18-02
20	**A-934**	Breather	18-02
21	**A-970**	Spring, shift lever	18-06
22	**A-1505**	Lever, underdrive	18-06
23	**A-971**	Ball, lever	18-06
24	**648589**	Lever, front wheel drive	18-06
25	**A-972**	Pin, pivot	18-06
26	**638224**	Fitting, lubricating	18-06
27	**A-974**	Seal, shift rod	18-07
28	**A-1106**	Yoke, front	18-04
29	**A-962**	Rod, front wheel drive	18-07
30	**A-960**	Fork, front wheel drive	18-07
31	**A-959**	Fork, underdrive	18-07
32	**5140**	Plug, filler	18-02
33	**A-10469**	Gear, mainshaft	18-03
34	**A-1410**	Washer, mainshaft nut	18-03
35	**642191**	Washer, thrust	18-05
36	**642189**	Gear, intermediate	18-05
37	**A-976**	Snap ring, bearing	18-04
38	**A-1007**	Bearing, clutch shaft	18-04
39	**A-980**	Nut, flange	18-04
40	**A-1028**	Washer, flange nut	18-04
41	**A-8835**	Shaft, output clutch	18-04
42	**A-992**	Gear, internal (10 T)	18-04
43	**A-991**	Snap Ring, output shaft	18-04
44	**A-990**	Washer, thrust	18-04
45	**A-15044**	Gear, output shaft (26 T)	18-04
46	**A-15045**	Gear, sliding (39 T)	18-04
47	**A-987**	Bushing, pilot, clutch shaft	18-04
48	**A-8841**	Shaft, output	18-04
49	**51575**	Cone and Rollers	18-04
50	**52883**	Cup, bearing	18-04
51	**A-1511**	Gear, speedometer (4 T)	18-08
52	**642190**	Bearing, intermediate shaft	18-05
53	**642188**	Shaft, intermediate	18-05
54	**A-1104**	Plug, drain	18-02
55	**A-954**	Gasket, bottom cover	18-02
56	**A-520**	Nut, mainshaft	17-03
57	**A-953**	Cover, bottom	18-02
58	**636396**	Sleeve, speedometer gear	18-08
59	**A-5707**	Gear, speedometer (15 T)	18-08
60	**A-985**	Bushing, speedometer gear	18-08
61	**A-1134**	Gasket, oil seal	18-04

Part No.	Description	Quan. Req'd. Per Assy.
	GROUP 18-02—TRANSFER CASE (Continued)	
6412	BOLT, hex. hd., 3/8"-16 x 3/4" } Rear cover to case	5
5010	LOCKWASHER, 3/8" } Rear cover to case	5
A-954	GASKET, bottom cover	1
A-957	GASKET, output clutch shaft bearing cap	1
A-1509	GASKET, rear cover	1
A-1104	PLUG, drain, transfer case	1
5140	PLUG, filler, transfer case	1
A-982	SHIM, output shaft rear bearing cap, .003	2
A-983	SHIM, output shaft rear bearing cap, .010	2
A-984	SHIM, output shaft rear bearing cap, .031	2
	GROUP 18-03—DRIVE GEAR	
A-10469	**Gear, Mainshaft, Transfer Case (26 Teeth)**	1
A-520	NUT, hex., 7/8"-16, slotted } Gear to shaft	1
A-1410	WASHER, plain, 1 9/16" O.D. x 29/32" I.D. x 5/32" } Gear to shaft	1
5397	PIN, cotter, 1/8" x 1 1/2" } Gear to shaft	1
	GROUP 18-04—GEARS, SHAFTS AND BEARINGS	
A-1007	BEARING, output clutch shaft (ball, annular, bore 1.181 x .629)	1
A-987	BUSHING, pilot, output clutch shaft	1
51575	CONE and ROLLERS, output shaft bearing (bore 1.3125 x .740)	2
52883	CUP, output shaft bearing cone and rollers	2
116714	FLANGE, companion, rear	1
A-980	NUT, hex., 3/4"-20, slotted } Rear companion flange	1
A-1028	WASHER, plain, 3/4" } Rear companion flange	2
5108	PIN, cotter, 1/8" x 1 1/4" } Rear companion flange	1
A-1134	GASKET, output clutch shaft bearing cap oil seal	2
A-992	GEAR, output clutch shaft (10 internal teeth)	1
A-15044	GEAR, output shaft (26 teeth)	1
A-15045	GEAR, sliding, output shaft (39 teeth)	1
A-958	OIL SEAL, output shaft front and rear bearing cap	2
A-8841	SHAFT, NUT and WASHER, output, assembly	1
A-8835	SHAFT, NUT and WASHER, output clutch, assembly	1
A-979	SHIELD, dust, companion flange, rear	1
A-1111	SHIELD, dust, companion flange and universal joint end yoke	2
A-976	SNAP RING, output clutch shaft bearing	1
A-991	SNAP RING, output shaft	1
A-990	WASHER, thrust, output shaft	2
A-1106	YOKE END, universal joint, front, assembly	1
	GROUP 18-05—IDLER GEAR, SHAFT AND BEARINGS	
	(Up to Serial No. 24196)	
A-924	BEARING, intermediate gear	2
A-15042	GEAR, intermediate	1
A-1001	PLATE, lock, intermediate	1
52189	BOLT, hex. hd., 3/8"-16 x 5/8" } Intermediate lock plate	1
5010	LOCKWASHER, 3/8" } Intermediate lock plate	1
A-998	SHAFT, intermediate	1
A-1000	WASHER, thrust, intermediate gear	2
	(After Serial No. 24196)	
642190	BEARING, intermediate gear (Hyatt No. 94622)	2
642189	GEAR, intermediate	1
A-1001	PLATE, lock, intermediate	1
52189	BOLT, hex. hd., 3/8"-16 x 5/8" } Intermediate lock plate	1
5010	LOCKWASHER, 3/8" } Intermediate lock plate	1
642188	SHAFT, intermediate	1
642191	WASHER, thrust, intermediate gear	2
	GROUP 18-06—SHIFT LEVER AND PARTS	
A-1506	**Lever, Shift, Front Wheel Drive (Use 648589)**	1
648589	**Lever, Shift, Front Wheel Drive**	1
A-1505	**Lever, Shift, Underdrive and Direct**	1
A-971	BALL, hand, shift lever	2
638224	FITTING, lubricating, shift lever pivot pin	1
A-972	PIN, pivot, shift lever	2
A-973	SCREW, set, shift lever pivot pin	1
A-970	SPRING, shift lever	2
	GROUP 18-07—SHIFT RODS	
A-962	**Rod, Shift, Front wheel Drive**	1
A-1504	**Rod, Shift, Underdrive and Direct**	1
5599	BALL, poppet, shift rod	2
A-960	FORK, shift, front wheel drive	1
A-959	FORK, shift, underdrive and direct	1

Part No.	Description	Quan. Req'd. Per Assy.
	GROUP 18-07—SHIFT RODS (Continued)	
A-965	INTERLOCK, shift rod	1
A-974	OIL SEAL, shift rod	2
A-967	PLUG, poppet, shift rod	2
A-963	SCREW, set, shift fork	2
A-966	SPRING, poppet, shift rod	2
	GROUP 18-08—SPEEDOMETER GEARS	
A-1511	**Gear, Speedometer Drive (4 Teeth)**	1
A-5707	**Gear, Speedometer Driven (15 Teeth)**	1
A-985	BUSHING, speedometer drive gear	1
636396	SLEEVE, speedometer driven gear	1
	GROUP 18-09—TRANSFER CASE MOUNTING	
A-147	BOLT, support, transfer case (hex. hd., ½"-20 x 3")	1
5916	NUT, hex., ½"-20 } Transfer case support bolt	1
5009	LOCKWASHER, ½" }	1
A-6740	CUP, retaining, transfer case insulator	1
634758	INSULATOR, support, transfer case	1
634759	SNUBBER, transfer case support insulator	1
51405	BOLT, hex. hd., ⅜"-16 x 1" } Transfer case to transmission	1
52911	BOLT, hex. hd., ⅜"-16 x 1⅛" } Transfer case to transmission	4
5010	LOCKWASHER, ⅜" } Transfer case to transmission	5
634762	WASHER, mounting, transfer case support	1

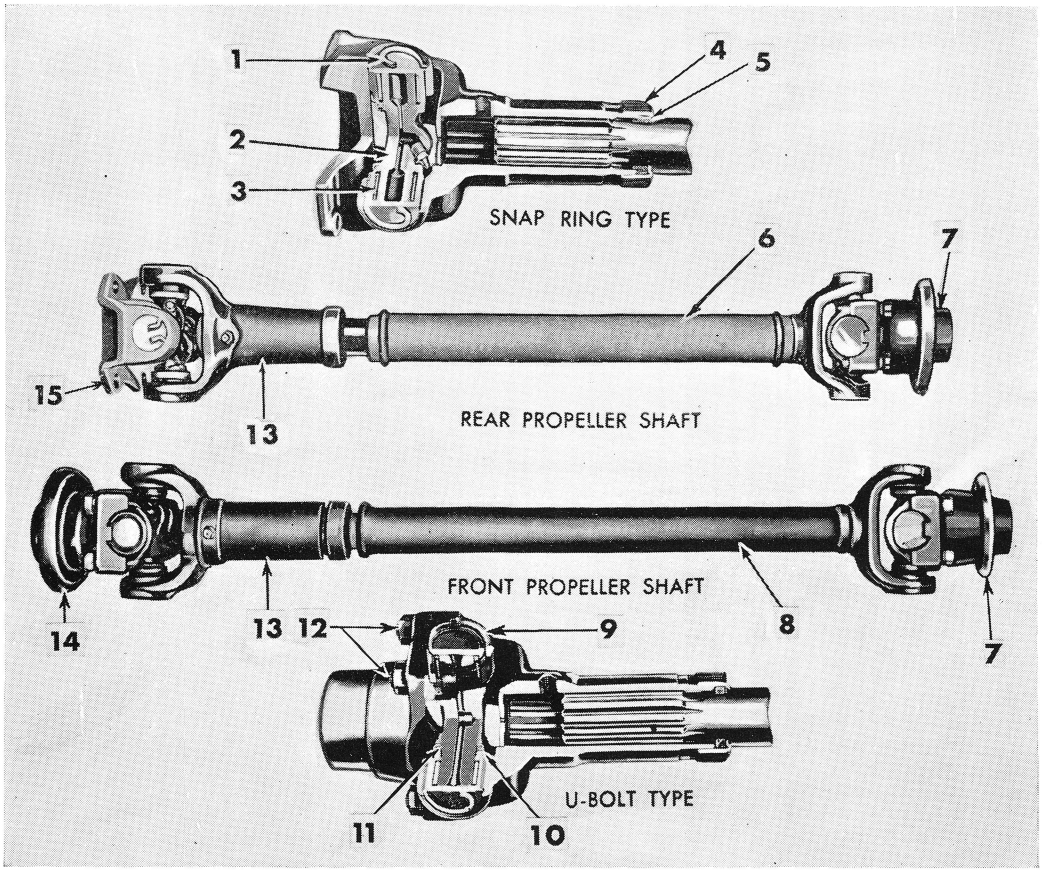

FIG. No. 35—PROPELLER SHAFTS

Ref. No.	Part No.	Description	Group No.
1	**A-945**	Snap Ring	19-02
2	**A-1433**	Journal and Bearing Kit	19-02
3			
4	**A-942**	Cap, yoke sleeve	19-02
5	**A-943**	Washer, yoke sleeve	19-02
6	**640222**	Tube, rear, first trucks	19-02
	640931	Tube, rear, after first trucks	19-02
7	**A-1445**	Yoke, axle end	21-04
	642120	Yoke, axle end	22-04
8	**640221**	Tube, front	19-02
9	**A-490**	"U" Bolt	19-02
10	**A-940**	Retainer, journal gasket	19-02
11	**A-941**	Gasket, journal	19-02
12	**A-491**	Nut, "U" bolt	19-02
13	**A-935**	Yoke, sleeve	19-02
14	**A-1106**	Yoke, transfer case to front propeller shaft	18-04
15	**A-950**	Yoke, flange	19-02

Part No.	Description	Quan. Req'd. Per Assy.

GROUP 19—PROPELLER SHAFT

GROUP 19-01—PROPELLER SHAFT ASSEMBLIES

640109	SHAFT, propeller, front, assembly	1
640110	SHAFT, propeller, rear, assembly—**Up to Serial No. 13453**	1
640930	SHAFT, propeller, rear, assembly—**After Serial No. 13453**	1

GROUP 19-02—UNIVERSAL JOINT

A-1434	BEARING, universal joint, assembly	4
A-490	BOLT, "U", universal joint bearing (5/16"-24 thd.)	6
A-491	NUT, hex., 5/16"-24 "U" Bolt to yoke	12
51833	LOCKWASHER, 5/16"	12
A-942	CAP, dust, universal joint yoke sleeve	2
638792	FITTING, lubricating, 1/4"-28	6
A-941	GASKET, universal joint trunnion	16
A-1433	KIT, universal joint journal	1
	Consists of:	
A-1434	4 BEARING Assembly	
A-1426	1 JOURNAL assembly	
A-945	4 SNAP RING, trunnion bearing	
A-937	PLUG, expansion, propeller shaft yoke	2
A-940	RETAINER, trunnion gasket	16
A-945	SNAP RING, trunnion bearing	16
640221	TUBE, propeller shaft, front, assembly	1
640222	TUBE, propeller shaft, rear, assembly **(Up to Serial No. 13453)**	1
640931	TUBE, propeller shaft, rear, assembly **(After Serial No. 13453)**	1
A-943	WASHER, universal joint yoke sleeve (cork, split, 1 37/64" O. D. x 1" I.D. x 5/16")	2
A-950	YOKE, propeller shaft flange	1
A-935	YOKE and PLUG, universal joint sleeve, assembly	2

GROUP 20—FRONT AXLE

GROUP 20-01—FRONT AXLE ASSEMBLY

645337	AXLE, front, assembly (Bendix)	1
642080	AXLE with BRAKES, HUBS and DRUMS, front, assembly (Bendix)	1

GROUP 20-02—FRONT AXLE HOUSING

640137	**Housing and Tube, Front Axle, Assembly**	1
636527	BOLT, differential bearing cap (hex. hd., 1/2"-13 x 2 1/4")	4
636528	LOCKWASHER, 1/2" (Differential bearing cap bolt)	4
A-870	BREATHER, axle housing, assembly	1
A-10231	COVER, axle housing	1
51523	BOLT, hex. hd., 5/16"-18 x 3/4" Cover to housing	10
52045	LOCKWASHER, 5/16"	10
644542	ELBOW, vent, front axle	1
A-782	GASKET, axle housing cover	1
636577	PLUG, drain, axle housing	1
636538	PLUG, filler, axle housing	1

GROUP 20-03—DIFFERENTIAL AND CARRIER ASSEMBLY

A-5087	**Differential, Generated Type Gears, Assembly** (Int'ch'ble with 640697)	1
640697	**Differential, Formate Type Gears, Assembly** (Int'ch'ble with A-5087)	1
A-793	CASE, differential	1
52880	CONE and ROLLERS, differential bearing (bore, 1.625 x 1.0000)	2
52881	CUP, differential bearing cone and rollers (.8125 wide x 3.000 O.D.)	2
A-5835	GEAR and PINION SET, axle drive, Generated type (Int'ch'ble with 640698)	1
640698	GEAR and PINION SET, axle drive, Formate type (Int'ch'ble with A-5835)	1
644147	GEAR and PINION SET, differential case, Formate type	1
	Consists of:	
A-794	2 GEAR, differential case	
A-796	2 PINION, mate	
A-6743	KIT, repair, differential gear	1
	Consists of:	
A-794	2 GEAR, differential case	
A-796	2 PINION, mate	
636464	1 SHAFT, pinion	
637235	2 WASHER, thrust, pinion	
636909	2 WASHER, thrust, side gear	
640663	KIT, repair, drive gear and pinion	1
	Consists of:	
A-5835	1 GEAR and PINION SET	
636569	1 NUT, pinion	
A-871	8 SCREW, bevel drive gear	
A-792	4 STRAP, lock	
636360	PIN, lock, pinion shaft	1

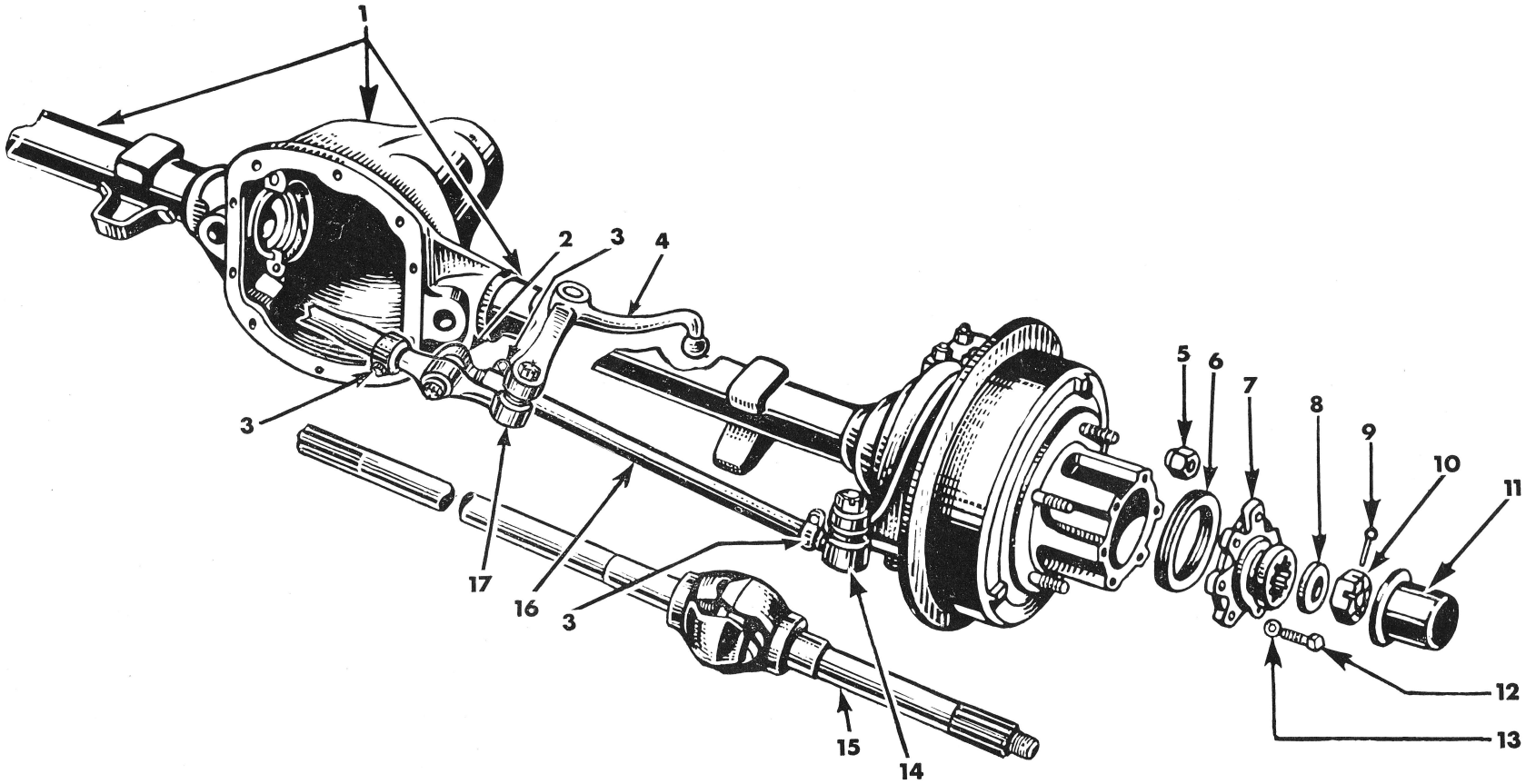

FIG. No. 36—FRONT AXLE HOUSING AND SHAFTS

Ref. No.	Part No.	Description	Group No.
1	**640137**	Housing, front axle	20-02
2	**A-838**	Socket, right	23-01
3	**640506**	Clamp, socket	23-01
4	**647008**	Crank, bell	23-01
5	**636035**	Nut, hub bolt, left	25-01
	635516	Nut, hub bolt, right	25-01
6	**A-862**	Shim, adjusting .010″	20-05
	A-863	Shim, adjusting .030″	20-05
7	**A-868**	Flange, drive	20-05
8	**636570**	Washer, axle nut	25-03
9	**636571**	Pin, cotter	25-03
10	**636569**	Nut, axle shaft	25-03
11	**641920**	Cap, hub	25-02
12	**A-760**	Bolt, axle flange	20-05
13	**5010**	Lockwasher	20-05
14	**A-847**	Socket, left, left rod	23-01
15	**A-8836**	Shaft and Joint, left	20-05
	A-8837	Shaft and Joint, right	20-05
16	**640177**	Rod, tie, left	23-01
17	**640178**	Socket, left, right rod	23-01

Part No.	Description	Quan. Req'd. Per Assy.
	GROUP 20-03—DIFFERENTIAL AND CARRIER ASSEMBLY (Continued)	
A-871	SCREW, hex. hd., 3/8"-24 x 7/8" (Bevel drive gear)	8
636464	SHAFT, pinion	1
639959	SHIM, adjusting, differential pinion, .003 thick	2
639960	SHIM, adjusting, differential pinion, .005 thick	2
639961	SHIM, adjusting, differential pinion, .010 thick	2
639962	SHIM, adjusting, differential pinion, .030 thick	2
A-792	STRAP, lock, drive gear bolt	4
637235	WASHER, thrust, pinion	2
636909	WASHER, thrust, side gear **(Use 637234)**	2
637234	WASHER, thrust, side gear	2
	GROUP 20-04—DIFFERENTIAL PINION BEARING	
52876	CONE and ROLLERS, drive pinion bearing, inner (Bore, 1.375 x 1.125)	1
52878	CONE and ROLLERS, drive pinion bearing, outer (Bore, 1.125 x .875)	1
52877	CUP, drive pinion bearing, inner (3.00 O.D. x .9375 wide)	1
52879	CUP, drive pinion bearing, outer (2.875 O.D. x .6875 wide)	1
636565	GASKET, pinion oil seal	1
636569	NUT, drive pinion to end yoke (hex., 3/4"-16)	1
639265	OIL SEAL, drive pinion (leather)	1
5397	PIN, drive pinion to companion flange nut (cotter, 1/8" x 1 1/2")	1
636568	SHIELD, dust, companion flange	1
639969	SHIM, adjusting, drive pinion bearing, large, .003 thick (front)	2
639970	SHIM, adjusting, drive pinion bearing, large, .005 thick (front)	2
639971	SHIM, adjusting, drive pinion bearing, large, .010 thick (front)	2
639972	SHIM, adjusting, drive pinion bearing, small, .003 thick (rear)	2
639973	SHIM, adjusting, drive pinion bearing, small, .005 thick (rear)	2
639974	SHIM, adjusting, drive pinion bearing, small, .010 thick (rear)	2
639975	SHIM, adjusting, drive pinion bearing, small, .030 thick (rear)	2
636566	SLINGER, oil, drive pinion bearing	1
639968	SPACER, drive pinion bearing	1
636570	WASHER, drive pinion nut (1 1/2" O.D. x 49/64" I.D. x 1/8" thick)	1
A-1445	YOKE END, universal joint, assembly	1
	GROUP 20-05—AXLE SHAFT AND UNIVERSAL JOINT—BENDIX	
A-8836	**Shaft and Universal Joint, Front Axle, Left with Nut and Washer**	1
A-8837	**Shaft and Universal Joint, Front Axle, Right with Nut and Washer**	1
A-6288	BALL, axle shaft universal joint center, left and right	2
A-6289	BALL, axle shaft universal joint, left and right (.872 diameter)	As req'd.
A-6290	BALL, axle shaft universal joint, left and right (.873 diameter)	As req'd.
A-6291	BALL, axle shaft universal joint, left and right (.874 diameter)	As req'd.
A-6292	BALL, axle shaft universal joint, left and right (.875 diameter)	As req'd.
A-6293	BALL, axle shaft universal joint, left and right (.876 diameter)	As req'd.
A-6294	BALL, axle shaft universal joint, left and right (.877 diameter)	As req'd.
A-6295	BALL, axle shaft universal joint, left and right (.878 diameter)	As req'd.
A-6362	BUSHING, axle shaft, outer	2
A-868	FLANGE, drive, axle shaft	2
A-760	BOLT, hex. hd., 3/8"-16 x 1 1/2" } Axle shaft flange	12
5010	LOCKWASHER, 3/8" } Axle shaft flange	12
A-6279	PIN, axle shaft universal joint center ball	2
A-6278	PIN, groove, axle shaft universal joint	2

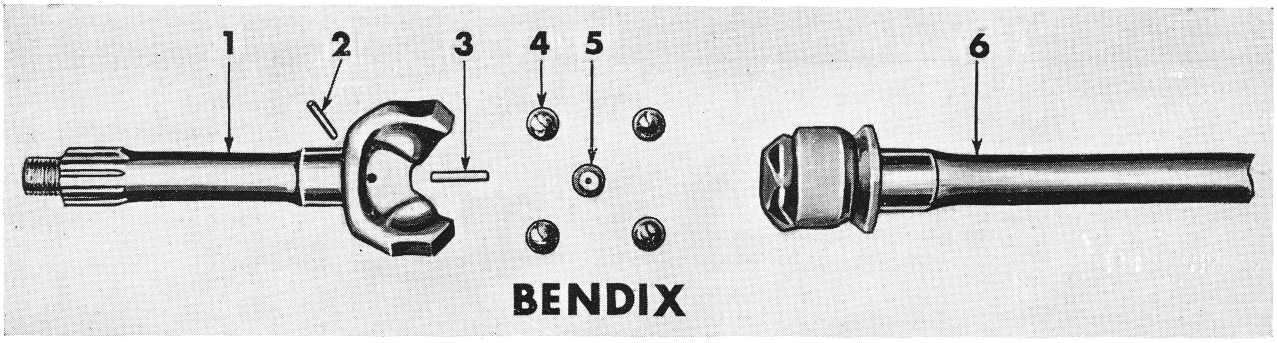

FIG. No. 37—BENDIX—FRONT AXLE UNIVERSAL JOINT

Ref. No.	Part No.	Description	Group No.
1	**A-6273**	Shaft, outer	20-05
2	**A-6278**	Pin, groove	20-05
3	**A-6279**	Pin, center ball	20-05
4	**A-6289 to A-6295**	Ball, universal joint	20-05
5	**A-6288**	Ball, center	20-05
6	**A-6276**	Shaft, inner, left	20-05
	A-6277	Shaft, inner, right	20-05

Part No.	Description	Quan. Req'd. Per Assy.
	GROUP 20-05—AXLE SHAFT AND UNIVERSAL JOINT—BENDIX (Continued)	
A-6273	SHAFT, axle, outer	2
A-6276	SHAFT, inner, left	1
A-6277	SHAFT, inner, right	1
A-862	SHIM, adjusting, universal joint, .010 thick	4
A-863	SHIM, adjusting, universal joint, .030 thick	2
A-780	WASHER, thrust, axle shaft	2
	GROUP 20-06—AXLE SHAFT AND UNIVERSAL JOINT—RZEPPA	
A-1728	**Shaft and Universal Joint, Axle, Left, Assembly (Use A-8836)**	1
A-1715	**Shaft and Universal Joint, Axle, Right, Assembly (Use A-8837)**	1
A-1721	BALL, 11/16", universal joint	12
A-6362	BUSHING, front axle shaft, outer	2
A-1719	CAGE, Universal joint	2
A-7111	KIT, front wheel universal joint	1
	Consists of:	
A-1721	12 BALL, universal joint	
A-1719	2 CAGE, universal joint	
A-1722	2 PILOT, universal joint	
A-1723	2 PIN, pilot, universal joint	
A-1720	2 RACE, universal joint, inner	
A-1724	2 RETAINER, axle shaft	
A-1725	6 SCREW, axle shaft retainer	
A-1726	2 SNAP RING, axle shaft retainer	
A-1722	PILOT, universal joint	2

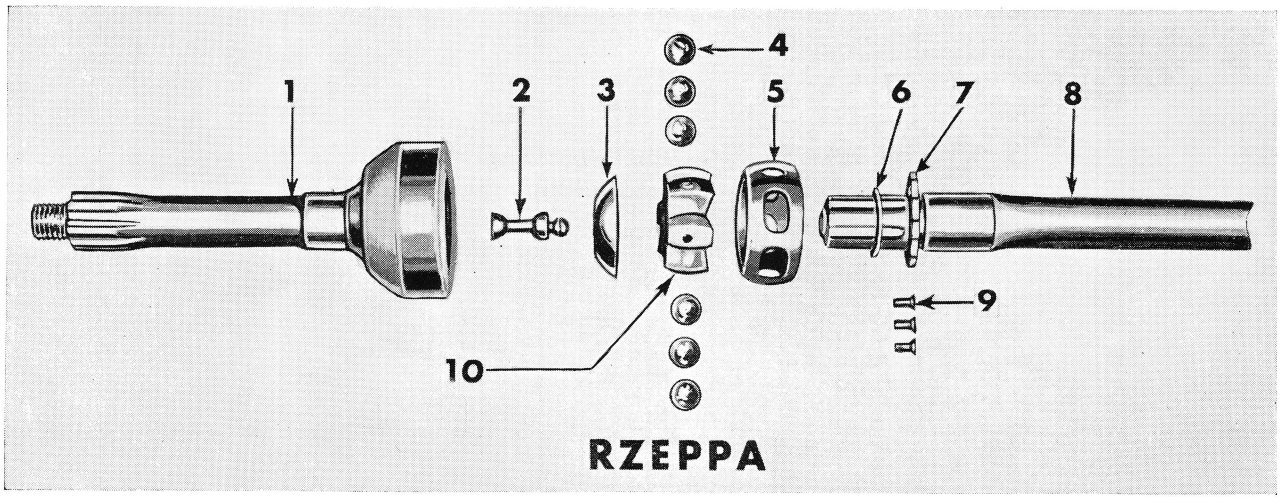

FIG. No. 38—RZEPPA—FRONT AXLE UNIVERSAL JOINT

Ref. No.	Part No.	Description	Group No.
1	**A-1718**	Shaft, outer	20-06
2	**A-1723**	Pin, pilot	20-06
3	**A-1722**	Pilot	20-06
4	**A-1721**	Ball	20-06
5	**A-1719**	Cage	20-06
6	**A-1726**	Snap Ring	20-06
7	**A-1724**	Retainer, shaft	20-06
8	**A-1729**	Shaft, inner, left	20-06
	A-1727	Shaft, inner, right	20-06
9	**A-1725**	Screw, retainer	20-06
10	**A-1720**	Race, inner	20-06

A-1723	PIN, pilot, universal joint	2
A-1720	RACE, universal joint, inner	2
A-1724	RETAINER, axle shaft	2
A-1725	SCREW, fl. hd., No. 8-32 x 7/16" (Axle shaft retainer)	6
A-1718	SHAFT, axle, outer, assembly	2
A-1729	SHAFT, inner, left (27 1/32")	1
A-1727	SHAFT, inner, right (14 5/32")	1
A-1726	SNAP RING, axle shaft retainer	2
	GROUP 20-07—STEERING KNUCKLE, FLANGE AND ARM	
A-826	ARM with KING PIN and LOCK PIN, steering knuckle, upper left, assembly **(Up to Serial No. 22972)**	1
A-822	ARM with KING PIN and LOCK PIN, steering knuckle, upper right, assembly **(Up to Serial No. 22972)**	1
A-821	BOLT, stop, steering knuckle	2
A-873	NUT, lock, hex., 3/8"-24 (Steering knuckle stop bolt)	2
A-853	BUSHING, wheel bearing spindle	2
A-828	CAP, king pin bearing, assembly (4 required **After Serial No. 22972)**	2

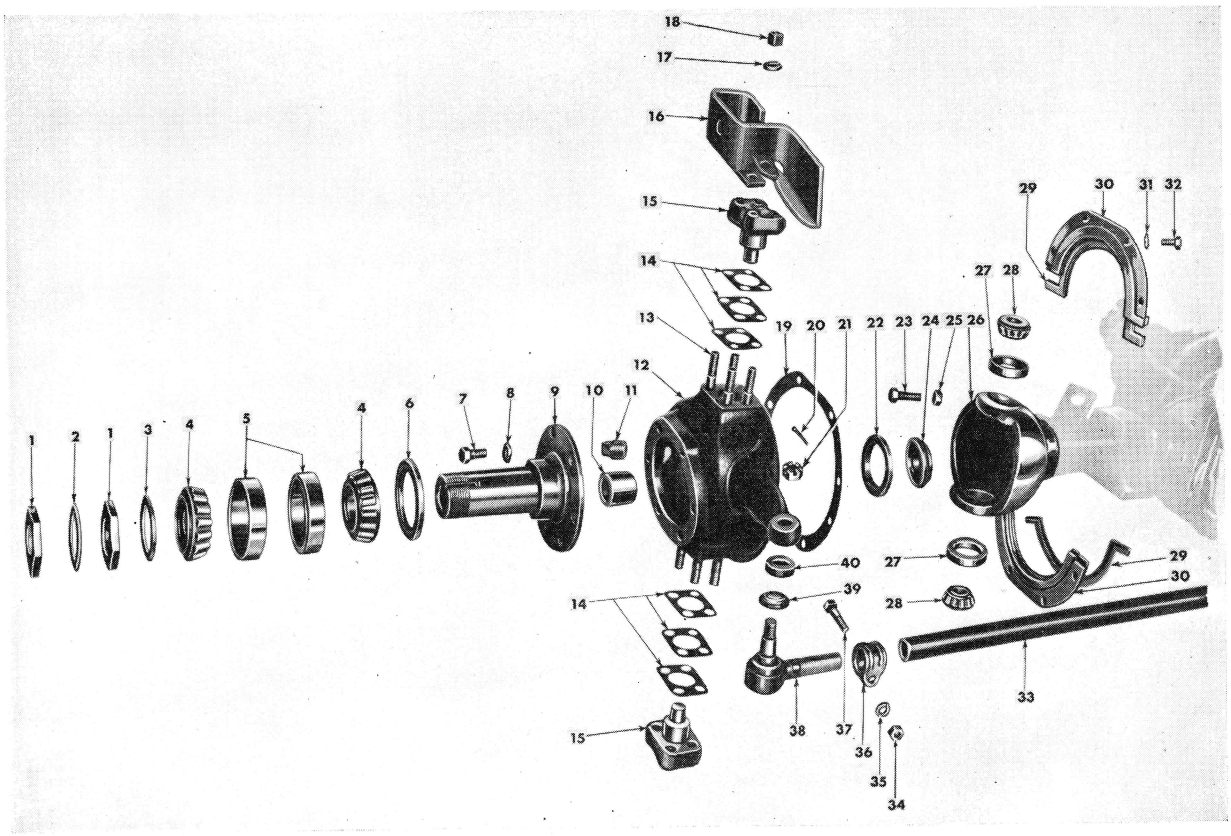

FIG. No. 39—STEERING KNUCKLE AND WHEEL BEARINGS

Ref. No.	Part No.	Description	Group No.
1	**A-866**	Nut, retaining, bearing	25-03
2	**A-867**	Washer, lock, bearing	25-03
3	**A-865**	Washer, lock, bearing	25-03
4	**52942**	Cone and Rollers, bearing	25-03
5	**52943**	Cup, wheel bearing	25-03
6	**A-864**	Oil Seal	25-03
7	**A-877**	Bolt, spindle to knuckle	24-04
8	**5010**	Lockwasher	24-04
9	**A-851**	Spindle and bushing	20-07
10	**A-853**	Bushing, spindle	20-07
11	**5140**	Plug, filler	20-07
12	**641629**	Knuckle and Arm, left	20-07
	641630	Knuckle and Arm, right	20-07
13	**A-1714**	Stud, king pin cap	20-07
14	**A-830**	Shim, adjusting, .003″ thick	20-07
	A-831	Shim, adjusting, .005″ thick	20-07
	A-832	Shim, adjusting, .010″ thick	20-07
	A-833	Shim, adjusting, .030″ thick	20-07
15	**A-828**	Cap, king pin	20-07
16	**A-1457**	Guard, brake hose	24-07
17	**5010**	Lockwasher	20-07
18	**630598**	Nut, cap stud	20-07
19	**A-820**	Gasket, oil seal	20-07
20	**5152**	Pin, cotter	23-01
21	**10558**	Nut, tie rod stud	23-01
22	**A-780**	Washer, thrust	20-07
23	**A-821**	Bolt, stop, steering	20-07
24	**A-6362**	Bushing, outer, axle shaft	20-05
25	**A-873**	Nut, stop bolt	20-07
26	**640137**	Housing, front axle	20-02
27	**52941**	Cup, king pin bearing	20-07
28	**52940**	Cone and Rollers, bearing	20-07
29	**640114**	Oil Seal, cork strip (half)	20-07
30	**A-814**	Container, oil seal (half)	20-07
31	**52510**	Lockwasher	20-07
32	**648877**	Screw, oil seal	20-07
33	**642058**	Rod, tie, steering, left	23-01
	642059	Rod, tie, steering, right	23-01
34	**5910**	Nut, tie rod clamp	23-01
35	**52045**	Lockwasher	23-01
36	**640506**	Clamp, tie rod socket	23-01
37	**640507**	Bolt, tie rod clamp	23-01
38	**A-847**	Socket, tie rod, left	23-01
	A-838	Socket, tie rod, right	23-01
39	**A-844**	Cover, dust	23-01
40	**642060**	Washer, rubber	23-01

Part No.	Description	Quan. Req'd. Per Assy.
	GROUP 20-07—STEERING KNUCKLE, FLANGE AND ARM (Continued)	
52940	CONE and ROLLERS, king pin bearing (Bore, .625 x 9/16″)	4
A-814	CONTAINER, steering knuckle oil seal, assembly (half)	4
52941	CUP, king pin bearing	4
A-820	GASKET, steering knuckle oil seal, assembly	2
A-812	KNUCKLE, steering, left **(Up to Serial No. 22972)**	1
641629	KNUCKLE and ARM, steering, left **(After Serial No. 22972)**	1
A-811	KNUCKLE, steering, right **(Up to Serial No. 22972)**	1
641630	KNUCKLE and ARM, steering, right **(After Serial No. 22972)**	1
630598	NUT, steering arm stud (hex., 3/8″-24)	16
5010	LOCKWASHER, 3/8″ (Steering arm stud)	16
640114	OIL SEAL, cork, steering knuckle, half	4
A-779	OIL SEAL, steering knuckle, carrier end	2
640118	OIL SEAL, steering knuckle, half, assembly (half)	4
A-872	SCREW, hex. hd., 5/16″-24 x 5/8″ **(Use 648877)**	16
648877	SCREW, hex. hd., 5/16″-24 x 11/16″ Oil seal to steering knuckle	16
52510	LOCKWASHER, 5/16″	16

CAUTION—Accept And Use Only Genuine Willys-Overland Parts—CAUTION

Part No.	Description	Quan. Req'd. Per Assy.
	GROUP 20-07—STEERING KNUCKLE, FLANGE AND ARM (Continued)	
A-824	PIN, king	4
A-825	PIN, lock, king pin	4
5140	PLUG, filler, steering knuckle	2
A-830	SHIM, adjusting, king pin bearing, .003	1
A-831	SHIM, adjusting, king pin bearing, .005	1
A-832	SHIM, adjusting, king pin bearing, .010	1
A-833	SHIM, adjusting, king pin bearing, .030	1
A-851	SPINDLE and BUSHING, wheel bearing, assembly	2
A-5504	STUD, dowel, steering arm **(Up to Serial No. 22972)**	4
A-1714	STUD, steering arm (3/8"-24 x 2")	12
A-780	WASHER, thrust, axle shaft to housing	2

GROUP 21—REAR AXLE

GROUP 21-01—REAR AXLE ASSEMBLY (Up to Serial No. 13453)
Full Floating Type

645339	**Axle, Rear, Assembly**	1
640666	**Axle with Brakes, Hubs and Drums, Rear**	1
	For Above Two Items	
	Use semi-floating axle and parts as listed below for replacement of full floating type axle assembly.	
640940	1 REAR AXLE ASSEMBLY (Semi-Floating)	
640931	1 Propeller Shaft Tube	
640933	4 Spring Clips	
640932	1 Spring Clip Plate and Shaft, Rear Left, Assembly	
640938	1 Spring Clip Plate and Shaft, Rear Right, Assembly	
A-1433	1 Universal Joint Kit	
A-7831	GASKET SET, rear axle	1
	Consists of:	
A-904	2 GASKET, axle shaft	
A-782	1 GASKET, housing cover	
636565	1 GASKET, oil seal	

GROUP 21-02—HOUSING ASSEMBLY (Up to Serial No. 13453)

A-888	**Housing and Tube, Rear Axle, Assembly**	1
636527	BOLT, differential bearing cap (hex. hd., 1/2"-13 x 2 1/4")	4
636528	LOCKWASHER, 1/2" (Differential bearing cap bolt)	4
A-870	BREATHER, axle housing, assembly	1
A-10231	COVER, axle housing	1
6428	BOLT, hex. hd., 5/16"-18 x 7/8" (Cover and brake tube tee bracket to housing)	2
51523	BOLT, hex. hd., 5/16"-18 x 3/4" } Cover to housing {	8
52045	LOCKWASHER, 5/16" } Cover to housing {	10
A-782	GASKET, axle housing cover	1
636577	PLUG, drain, axle housing	1
636538	PLUG, filler, axle housing	1

GROUP 21-03—DIFFERENTIAL AND CARRIER ASSEMBLY (Up to Serial No. 13453)

A-5087	**Differential, Generated Type Gears, Assembly** (Int'ch'ble with 640697)	1
640697	**Differential, Formate Type Gears, Assembly** (Int'ch'ble with A-5087)	1
A-793	CASE, differential	1
52880	CONE and ROLLERS, differential bearing	2
52881	CUP, differential bearing cone and rollers	2
A-5835	GEAR and PINION SET, axle drive, Generated type (Int'ch'ble with 640698)	1
640698	GEAR and PINION SET, axle drive, Formate type (Int'ch'ble with A-5835)	1
644147	GEAR and PINION SET, differential case, Formate type	1
	Consists of:	
A-794	2 GEAR, differential case	
A-796	2 PINION, mate	
A-6743	KIT, repair, differential gear	1
	Consists of:	
A-794	2 GEAR, differential case	
A-796	2 PINION, mate	
636464	1 SHAFT, pinion	
637235	2 WASHER, thrust, pinion	
636909	2 WASHER, thrust, side gear	
640663	KIT, repair, drive gear and pinion	1
	Consists of:	
A-5835	1 GEAR and PINION SET	
636569	1 NUT, pinion	
A-871	8 SCREW, bevel drive gear	
A-792	4 STRAP, lock	
636360	PIN, lock, pinion shaft	1
A-871	SCREW, hex. hd., 3/8"-24 x 7/8" (Bevel drive gear)	8
636464	SHAFT, pinion	1

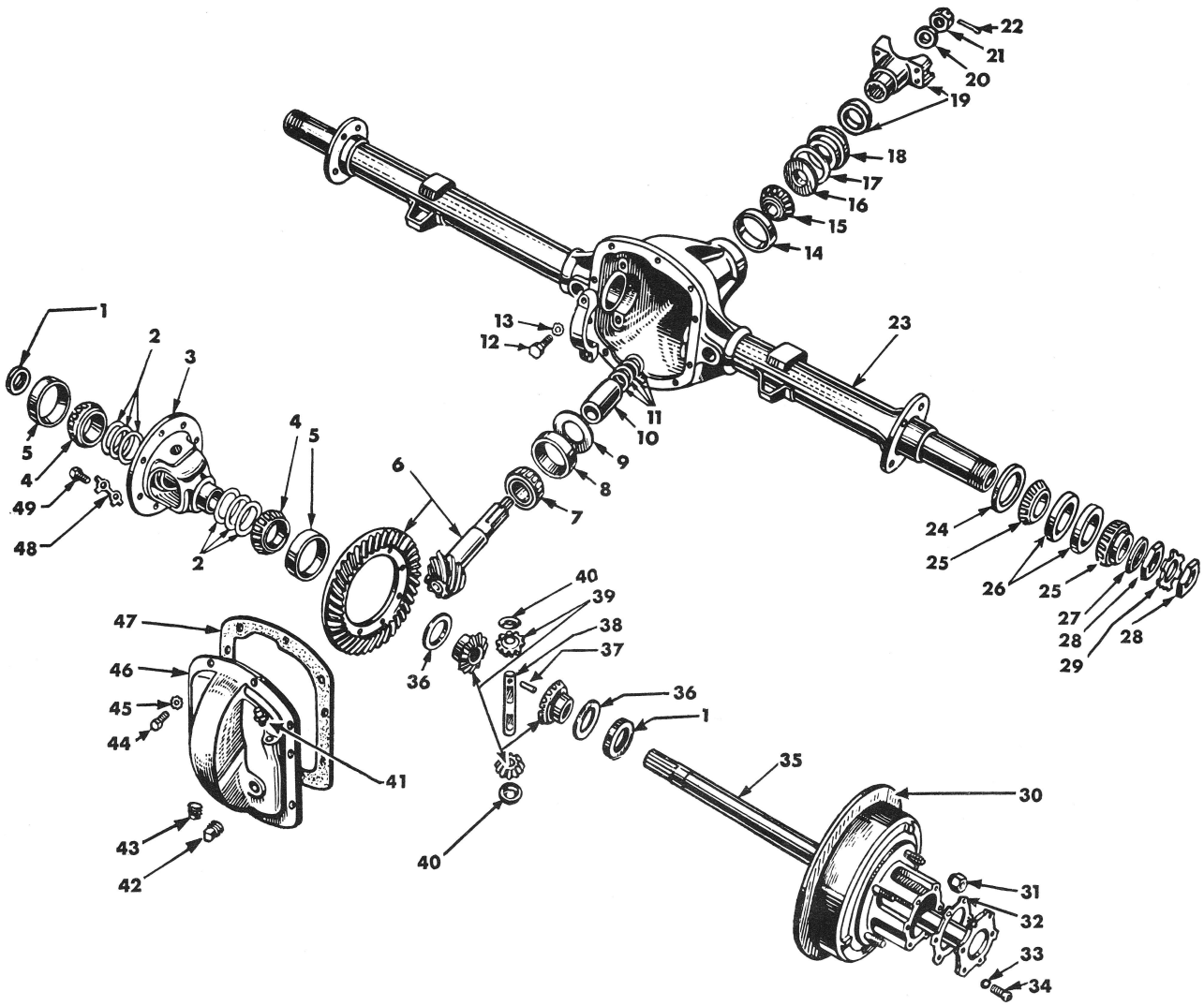

FIG. No. 40—REAR AXLE (Full-Floating) **(Up to Serial No. 13453)**

Ref. No.	Part No.	Description	Group No.
1	A-779	Oil Seal, inner	21-05
2	639959	Shim, differential, .003"	21-03
	639960	Shim, differential, .005"	21-03
	639961	Shim, differential, .010"	21-03
	639962	Shim, differential, .030"	21-03
3	A-793	Case, differential	21-03
4	52880	Cone, differential bearing	21-03
5	52881	Cup, bearing	21-03
6	A-5835	Gear and Pinion Set	21-03
7	52876	Cone, pinion rear bearing	21-04
8	52877	Cup, bearing	21-04
9	639969	Shim, pinion, rear, .003"	21-04
	639970	Shim, pinion, rear, .005"	21-04
	639971	Shim, pinion, rear, .010"	21-04
10	639968	Spacer, bearing	21-04
11	639972	Shim, pinion, front, .003"	21-04
	639973	Shim, pinion, front, .005"	21-04
	639974	Shim, pinion, front, .010"	21-04
	639975	Shim, pinion, front, .030"	21-04
12	636527	Bolt, bearing cap	21-02
13	636528	Lockwasher	21-02
14	52879	Cup, bearing	21-04
15	52878	Cone, pinion front bearing	21-04
16	636566	Oil Slinger	21-04
17	636565	Gasket, oil seal	21-04
18	639265	Oil Seal, pinion	21-04
19	A-1445	Yoke, universal joint	21-04
20	636570	Washer, pinion nut	21-04
21	636569	Nut, pinion	21-04
22	5397	Pin, cotter	21-04

Ref. No.	Part No.	Description	Group No.
23	A-888	Housing, rear axle	21-02
24	A-864	Oil Seal, wheel hub	25-03
25	52942	Cone, wheel bearing	25-03
26	52943	Cup, wheel bearing	25-03
27	A-865	Lockwasher, bearing	25-03
28	A-866	Nut, retaining, bearing	25-03
29	A-867	Washer, bearing nut	25-03
30	641925	Hub and Drum, left	25-02
	641926	Hub and Drum, right	25-02
31	641952	Nut, hub bolt, left	25-01
	641953	Nut, hub bolt, right	25-01
32	A-904	Gasket, axle shaft	21-05
33	5010	Lockwasher	21-05
34	A-760	Bolt, axle shaft	21-05
35	A-901	Shaft, rear axle, right	21-05
	A-902	Shaft, rear axle, left	21-05
36	637234	Washer, thrust, side gear	21-03
37	636360	Pin, lock, mate pinion	21-03
38	636464	Shaft, mate pinion	21-03
39	644147	Set, gear and pinion	21-03
40	637235	Washer, mate pinion	21-03
41	A-870	Breather, axle housing	21-02
42	636577	Plug, drain	21-02
43	636538	Plug, filler	21-02
44	51523	Bolt, housing cover	21-02
45	52045	Lockwasher	21-02
46	A-10231	Cover, axle housing	21-02
47	A-782	Gasket, housing cover	21-02
48	A-792	Strap, lock	21-03
49	A-871	Screw, drive gear	21-03

Part No.	Description	Quan. Req'd. Per Assy.
	GROUP 21-03—DIFFERENTIAL AND CARRIER ASSEMBLY (Up to Serial No. 13453) (Continued)	
639959	SHIM, adjusting, differential pinion, .003 thick	2
639960	SHIM, adjusting, differential pinion, .005 thick	2
639961	SHIM, adjusting, differential pinion, .010 thick	2
639962	SHIM, adjusting, differential pinion, .030 thick	2
A-792	STRAP, lock, drive gear bolt	4
637235	WASHER, thrust, pinion	2
636909	WASHER, thrust, side gear **(Use 637234)**	2
637234	WASHER, thrust, side gear	2
	GROUP 21-04—DIFFERENTIAL PINION BEARING (Up to Serial No. 13453)	
52876	CONE and ROLLERS, drive pinion bearing, inner (Bore, 1.375 x 1.125)	1
52878	CONE and ROLLERS, drive pinion bearing, outer (Bore, 1.125 x .875)	1
52877	CUP, drive pinion bearing, inner (3.00 O.D. x .9375 wide)	1
52879	CUP, drive pinion bearing, outer (2.875 O.D. x .6875 wide)	1
636565	GASKET, pinion oil seal	1
636569	NUT, drive pinion to end yoke (hex., ¾"-16)	1
639265	OIL SEAL, drive pinion (leather)	1
5397	PIN, drive pinion to companion flange nut (Cotter, 1.540 x .109)	1
636568	SHIELD, dust, companion flange	1
639969	SHIM, adjusting, drive pinion bearing, large, .003 thick	2
639970	SHIM, adjusting, drive pinion bearing, large, .005 thick	2
639971	SHIM, adjusting, drive pinion bearing, large, .010 thick	2
639972	SHIM, adjusting, drive pinion bearing, small, .003 thick	2
639973	SHIM, adjusting, drive pinion bearing, small, .005 thick	2
639974	SHIM, adjusting, drive pinion bearing, small, .010 thick	2
639975	SHIM, adjusting, drive pinion bearing, small, .030 thick	2
636566	SLINGER, oil, drive pinion bearing	1
A-799	SPACER, drive pinion bearing **(Use 639968)**	1
639968	SPACER, drive pinion bearing	1
636570	WASHER, drive pinion nut (1½" O.D. x 49/64" I.D. x ⅛" thick)	1
A-1445	YOKE END, universal joint, assembly	1
	GROUP 21-05—AXLE DRIVE SHAFTS—Up to Serial No. 13453	
A-904	GASKET, axle shaft	2
A-6439	GUIDE, axle shaft	2
A-779	OIL SEAL, axle shaft, carrier end	2
A-902	SHAFT, axle drive, left	1
A-901	SHAFT, axle drive, right	1
A-760	BOLT, hex. hd., ⅜"-16 x 1½" } Axle drive shaft {	12
5010	LOCKWASHER, ⅜" } Axle drive shaft {	12

GROUP 22—REAR AXLE

GROUP 22-01—REAR AXLE ASSEMBLY (After Serial No. 13453) Semi-Floating Type

645334	AXLE, rear, assembly	1
640940	AXLE with BRAKES, HUBS and DRUMS, rear, assembly	

GROUP 22-02—HOUSING ASSEMBLY (After Serial No. 13453)

640950	**Housing and Tube, Rear Axle, Assembly**	1
636527	BOLT, differential bearing cap (hex. hd., ½"-13 x 2¼")	4
636528	LOCKWASHER, ½" (Differential bearing cap bolt)	4
639821	COVER, axle housing	1
6412	BOLT, hex. hd., ⅜"-16 x ¾" (Axle housing cover and tee bracket)	2
636537	BOLT, hex. hd., ⅜"-16 x ⅝" } Axle housing cover {	8
5010	LOCKWASHER, ⅜" } Axle housing cover {	10
639957	GASKET, axle housing cover	1
636577	PLUG, drain, axle housing (Ctsk., ¾" pipe)	1
636538	PLUG, filler, axle housing (Sq. hd., ¾" pipe)	1

GROUP 22-03—DIFFERENTIAL AND CARRIER ASSEMBLY (After Serial No. 13453)

640960	**Differential, Semi-Floating Rear Axle, Assembly** (Generated type drive gears, Formate type case gears) (Int'ch'ble with 641243, 647059 and 647060)	1
641243	**Differential, Semi-Floating Rear Axle, Assembly** (Formate type drive gears, Formate type case gears) (Int'ch'ble with 640960, 647059 and 647060)	1
647059	**Differential, Semi-Floating Rear Axle, Assembly** (Generated type drive gears, Revacycle type case gears) (Int'ch'ble with 640960, 641243 and 647060)	1
647060	**Differential, Semi-Floating Rear Axle, Assembly** (Formate type drive gears, Revacycle type case gears) (Int'ch'ble with 640960, 641243 and 647059)	1
639967	CASE, differential	1
52979	CONE and ROLLERS, differential bearing	2
52980	CUP, differential bearing cone and rollers	2
640964	GEAR, side, differential case (16 teeth) **(Use 647063)**	2
640961	GEAR and PINION SET, axle drive, Generated type (Int'ch'ble with 641244)	1

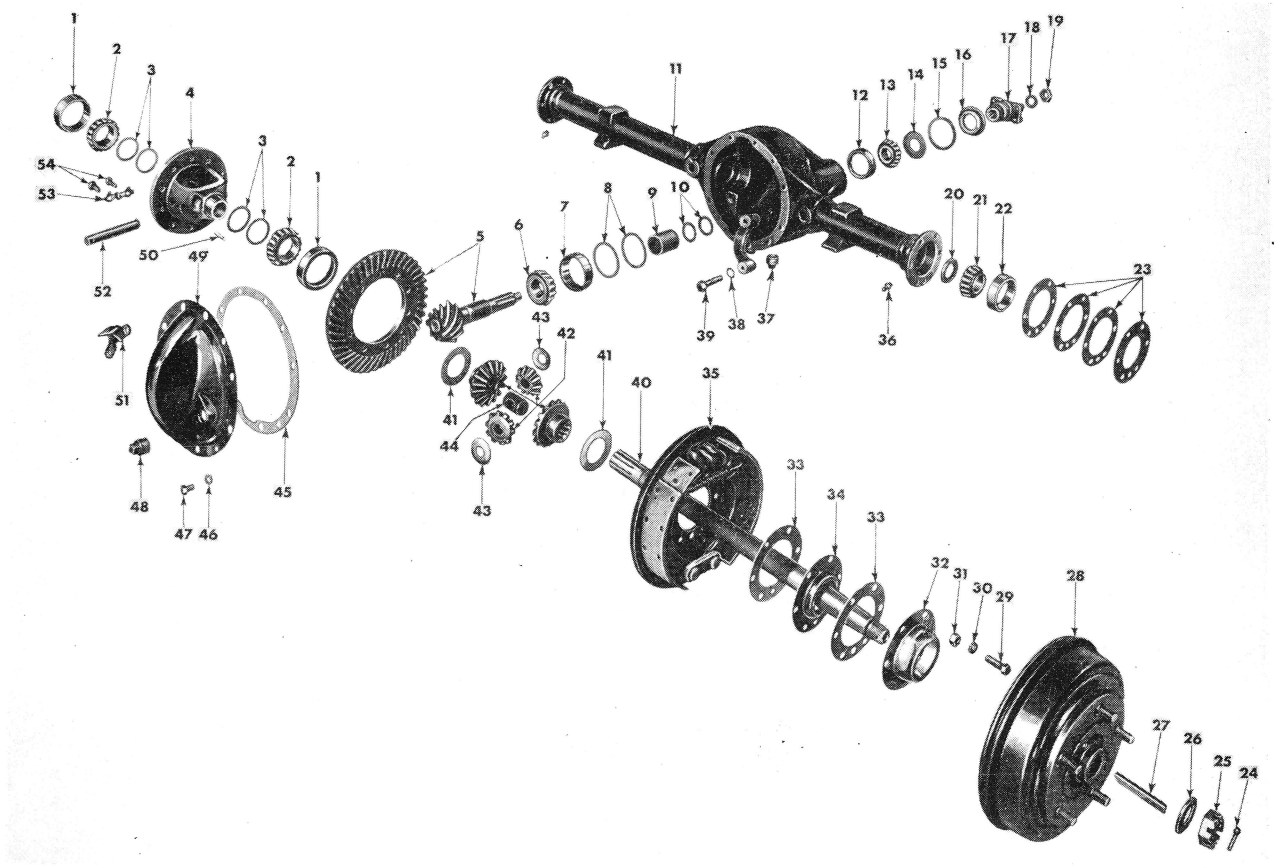

FIG. No. 41—REAR AXLE (Semi-Floating) **(After Serial No. 13453)**

Ref. No.	Part No.	Description	Group No.
1	**52980**	Cup, bearing	22-03
2	**52979**	Cone, and Rollers, bearing	22-03
3	**639959**	Shim, adjusting, .003″	22-03
	639960	Shim, adjusting, .005″	22-03
	639961	Shim, adjusting, .010″	22-03
	639962	Shim, adjusting, .030″	22-03
4	**639967**	Case, differential	22-03
5	**640961**	Gear and Pinion Set	22-03
6	**52876**	Cone, bearing, inner	22-04
7	**52877**	Cup, bearing, inner	22-04
8	**639969**	Shim, adjusting, .003″	22-04
	639970	Shim, adjusting, .005″	22-04
	639971	Shim, adjusting, .010″	22-04
9	**639968**	Spacer, bearing	22-04
10	**639972**	Shim, bearing, outer, .003″	22-04
	639973	Shim, bearing, outer, .005″	22-04
	639974	Shim, bearing, outer, .010″	22-04
	639975	Shim, bearing, outer, .030″	22-04
11	**640950**	Housing Assembly	22-02
12	**52879**	Cup, bearing, outer	22-04
13	**52878**	Cone, bearing, outer	22-04
14	**636566**	Slinger, oil, pinion	22-04
15	**636565**	Gasket, oil seal	22-04
16	**642121**	Shield, dust	22-04
17	**642120**	Yoke, universal joint	22-04
18	**636570**	Washer, pinion nut	22-04
19	**636569**	Nut, pinion	22-04
20	**640959**	Oil Seal, inner	22-05
21	**52799**	Cone, bearing, wheel	22-05
22	**52800**	Cup, bearing, wheel	22-05
23	**640971**	Shim, axle bearing, .003″	22-05
	640972	Shim, axle bearing, .005″	22-05
	640973	Shim, axle bearing, .010″	22-05
	640974	Shim, axle bearing, .030″	22-05
24	**5397**	Pin, cotter	22-05
25	**636344**	Nut, axle shaft	22-05
26	**640945**	Washer, axle shaft	22-05
27	**636374**	Key, axle shaft	22-05
28	**640936**	Hub and Drum, left	25-02
	640937	Hub and Drum, right	25-02
29	**50878**	Bolt, brakes to housing	24-04
30	**5010**	Lockwasher	24-04
31	**636575**	Nut, brakes to housing	24-04
32	**640888**	Protector, grease, brake	25-03A
33	**640886**	Gasket, grease protector	25-03A
34	**640885**	Retainer, grease	25-03A
35	**641927**	Brake, left	24-02
	641928	Brake, right	24-02
36	**640038**	Fitting, lubricating	22-05
37	**636577**	Plug, drain	22-02
38	**636528**	Lockwasher, cap bolt	21-02
39	**636527**	Bolt, bearing cap	21-02
40	**640968**	Shaft, rear axle, left	22-05
	640969	Shaft, rear axle, right	22-05
41	**636551**	Washer, side gear	22-03
42	**647063**	Set, differential case gear	22-03
43	**636554**	Washer, pinion	22-03
44	**640965**	Spacer, axle shaft	22-03
45	**639957**	Gasket, cover	22-02
46	**5010**	Lockwasher	22-02
47	**636537**	Bolt, cover	22-02
48	**636538**	Plug, filler	22-02
49	**639821**	Cover, housing	22-02
50	**636360**	Pin, lock	22-03
51	**640944**	Bracket, tee	24-07
52	**636553**	Shaft, pinion	22-03
53	**636548**	Strap, lock	22-03
54	**636547**	Screw, drive gear	22-03

Part No.	Description	Quan. Req'd. Per Assy.
	GROUP 22-03—DIFFERENTIAL AND CARRIER ASSEMBLY (After Serial No. 13453) (Continued)	
641244	GEAR and PINION SET, axle drive, Formate type (Int'ch'ble with 640961)	1
647063	KIT, differential case gears	1
	Consists of:	
647061	2 GEAR, side differential case (16 teeth) **Formate**	
647062	2 PINION, differential case (10 teeth) **Formate**	
	Or the following two (2) items:	
640964	2 GEAR, side, differential case (16 teeth) **Revacycle**	
636552	2 PINION, differential case (10 teeth) **Revacycle**	
	Gears Of One Type Must Not Be Mixed With The Other	
640939	KIT, repair, drive gear and pinion	1
	Consists of:	
640961	1 GEAR and PINION SET	
636569	1 NUT, pinion	
636547	10 SCREW, bevel drive gear	
636548	5 STRAP, lock	
636360	PIN, lock, pinion shaft	1
636552	PINION, differential case (10 teeth) **(Use 647063)**	2
636547	SCREW, hex. hd., 3/8"-24 x 1 1/8" (Bevel drive gear)	10
636553	SHAFT, differential pinion	1
639959	SHIM, adjusting, differential pinion, .003 thick	2
639960	SHIM, adjusting, differential pinion, .005 thick	2
639961	SHIM, adjusting, differential pinion, .010 thick	2
639962	SHIM, adjusting, differential pinion, .030 thick	2
640965	SPACER, drive shaft (Differential center block)	1
636548	STRAP, lock, drive gear bolt	5
636554	WASHER, thrust, pinion	2
636551	WASHER, thrust, side gear	2
	GROUP 22-04—DIFFERENTIAL PINION BEARING (After Serial No. 13453)	
52876	CONE and ROLLERS, drive pinion bearing, inner (Bore, 1.375 x 1.125)	1
52878	CONE and ROLLERS, drive pinion bearing, outer (Bore, 1.125 x .875)	1
52877	CUP, drive pinion bearing, inner (3.00 O.D. x .9375 wide)	1
52879	CUP, drive pinion bearing, outer (2.875 O.D. x .6875 wide)	1
636565	GASKET, pinion oil seal	1
636569	NUT, axle drive pinion (hex., 3/4"-16)	1
639265	OIL SEAL, drive pinion bearing (leather)	1
636571	PIN, drive pinion nut (cotter, 7/64" x 1 1/2")	1
642121	SHIELD, dust, universal joint end yoke	1
639969	SHIM, adjusting, drive pinion bearing, large, .003 thick (rear)	2
639970	SHIM, adjusting, drive pinion bearing, large, .005 thick (rear)	2
639971	SHIM, adjusting, drive pinion bearing, large, .010 thick (rear)	2
639972	SHIM, adjusting, drive pinion bearing, small, .003 thick (front)	2
639973	SHIM, adjusting, drive pinion bearing, small, .005 thick (front)	2
639974	SHIM, adjusting, drive pinion bearing, small, .010 thick (front)	2
639975	SHIM, adjusting, drive pinion bearing, small, .030 thick (front)	2
636566	SLINGER, oil, drive pinion bearing	1
639968	SPACER, drive pinion bearing	1
636570	WASHER, drive pinion nut (1 1/2" O.D. x 49/64" I.D. x 1/8" thick)	1
642120	YOKE END with DUST SHIELD, universal joint, assembly	1
	GROUP 22-05—AXLE DRIVE SHAFTS (After Serial No. 13453)	
52799	CONE and ROLLERS, rear axle shaft bearing	2
52800	CUP, rear wheel bearing	2
640038	FITTING, grease, rear axle wheel bearing	2
636374	KEY, rear axle shaft	2
636344	NUT, rear axle shaft (hex., 1"-14)	2
5397	PIN, cotter, 1/8" x 1 1/2" (Axle shaft nut)	2
640959	OIL SEAL, axle shaft, carrier end	2
640970	RETAINER, rear axle shaft bearing	2
640968	SHAFT, axle drive, left	1
640969	SHAFT, axle drive, right	1
50878	BOLT, hex. hd., 3/8"-24 x 1 1/8" Axle drive shaft	12
5010	LOCKWASHER, 3/8" Axle drive shaft	12
640971	SHIM, axle shaft roller bearing, .003 thick	As req'd.
640972	SHIM, axle shaft roller bearing, .005 thick	As req'd.
640973	SHIM, axle shaft roller bearing, .010 thick	As req'd.
640974	SHIM, axle shaft roller bearing, .030 thick	As req'd.
640945	WASHER, rear axle shaft	2

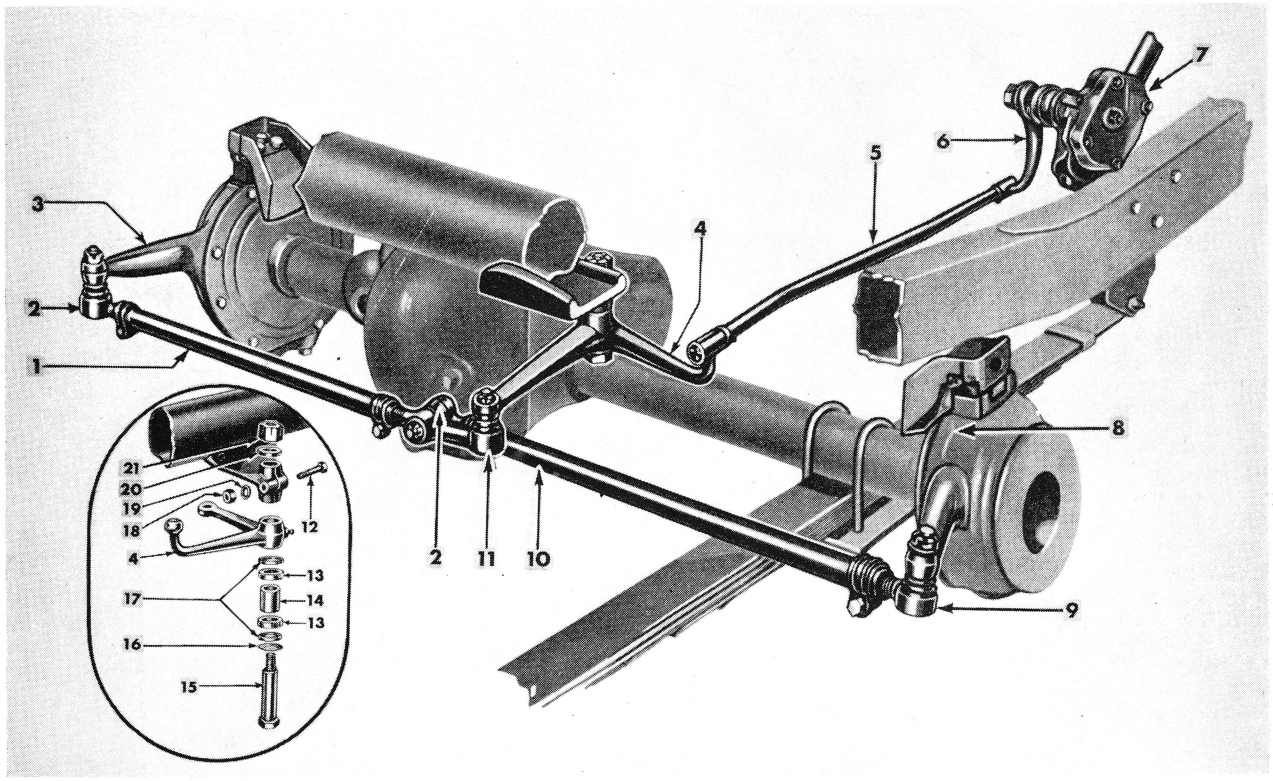

FIG. No. 42—STEERING SYSTEM (CJ-3A)

Ref. No.	Part No.	Description	Group No.
1	**642057**	Rod, tie, right **(After Serial No. 22972)**	23-01
2	**A-838**	Socket, right	23-01
3	**641630**	Knuckle, right **(After Serial No. 22972)**	20-07
4	**647008**	Crank, bell **(After Serial No. 199079)**	23-01
5	**646618**	Rod, connecting **(After Serial No. 199079)**	23-01
6	**A-1116**	Arm, steering	23-02
7	**647694**	Gear, steering (CJ-3A)	23-02
8	**641629**	Knuckle, left **(After Serial No. 22972)**	20-07
9	**A-847**	Socket, left, left rod	23-01
10	**642056**	Rod, tie, left **(After Serial No. 22972)**	23-01
11	**640178**	Socket, left, right rod	23-01
12	**GM-106293**	Bolt, bell crank bracket	23-01
13	**645664**	Bearing, bell crank	23-01
14	**645662**	Spacer, bearing	23-01
15	**649219**	Shaft, bell crank	23-01
16	**54394**	Washer, shaft, lower	23-01
17	**645663**	Seal, bearing	23-01
18	**54392**	Nut, bracket clamp	23-01
19	**5059**	Lockwasher, bracket clamp	23-01
20	**53570**	Washer, shaft, upper	23-01
21	**649240**	Nut, bell crank shaft	23-01

(Ref. No. 12–21: **After Serial No. 199079**)

Part No.	Description	Quan. Req'd. Per Assy.
	GROUP 23—STEERING	
	GROUP 23-01—STEERING CONNECTING ROD, TIE ROD AND BELL CRANK	
A-857	BEARING, steering bell crank, assembly **(Up to Serial No. 199079)**	2
645664	BEARING, steering bell crank **(After Serial No. 199079)**	2
640208	BRACKET, steering bell crank **(Up to Serial No. 199079)**	1
647009	BRACKET, steering bell crank **(After Serial No. 199079)**	1
GM-106293	BOLT, hex. hd., 7/16"-20 x 2¼" (Bell crank bracket clamp)	1
54392	NUT, hex., 7/16"-20 (Bell crank bracket clamp)	1
5059	LOCKWASHER, 7/16" (Bell crank bracket clamp)	1
640506	CLAMP, cross steering tie rod socket	4
640507	BOLT, hex. hd., 5/16"-24 x 1 7/16" (Cross steering tie rod socket clamp)	4
5910	NUT, hex., 5/16"-24 (Cross steering tie rod socket clamp)	8
52045	LOCKWASHER, 5/16" (Cross steering tie rod socket clamp)	4
A-837	CLAMP, steering connecting rod **(Use 640506)**	4
A-875	BOLT, hex. hd., 5/16"-24 x 1 7/16" **(Use 640507)** (Steering connecting rod clamp)	4
5910	NUT, hex., 5/16"-24 (Steering connecting rod clamp)	4
5152	PIN, cotter, 3/32" x 7/8" (Steering connecting rod clamp)	4
52045	LOCKWASHER, 5/16" (Steering connecting rod clamp)	4
A-844	COVER, dust, cross steering tie rod socket	4
A-622	COVER, dust, steering connecting rod (rubber)	2
640184	CRANK, bell, steering connecting rod, assembly **(Up to Serial No. 199079)**	1
647008	CRANK, bell, steering **(After Serial No. 199079)**	1
640038	FITTING, lubricating, ⅛" pipe thd., straight (For bell crank) (Int'ch'ble with 646582)	1
646582	FITTING, lubricating (Int'ch'ble with 640038)	1
392909	FITTING, lubricating, ¼"-28 thd., straight (Int'ch'ble with 646906)	4
646906	FITTING, lubricating (Int'ch'ble with 392909)	4

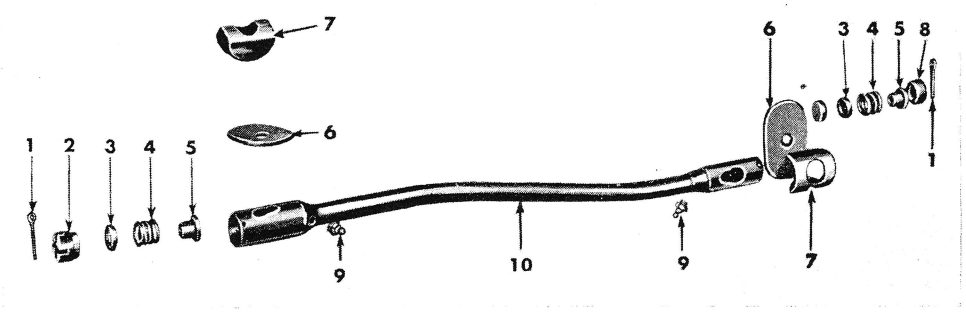

FIG. No. 43—STEERING CONNECTING ROD

Ref. No.	Part No.	Description	Group No.	Ref. No.	Part No.	Description	Group No.
1	**5134**	Pin, cotter	23-01	6	**A-622**	Cover, dust (rubber)	23-01
2	**630756**	Plug, large	23-01	7	**A-623**	Shield, dust	23-01
3	**630755**	Seat, ball	23-01	8	**630757**	Plug, ball seat	23-01
4	**630754**	Spring, ball seat	23-01	9	**392909**	Fitting, lubricating	23-01
5	**630753**	Plug, spring	23-01	10	**646620**	Rod, connecting **(After Serial No. 199079)**	23-01

Part No.	Description	Quan. Req'd. Per Assy.
	GROUP 23-01—STEERING CONNECTING ROD, TIE ROD AND BELL CRANK (Continued)	
638500	FITTING, lubricating (cross steering tie rod) (Int'ch'ble with GM-191350)	4
GM-191350	FITTING, lubricating, 90° (Int'ch'ble with 638500)	4
10558	NUT, cross steering tie rod stud (hex. ½"-20)	4
A-876	NUT, steering connecting rod bell crank (hex., ¾"-20) **(Up to Serial No. 199079)**	1
52527	PIN, cotter, ⅛" x ⅜" (Bell crank nut to shaft)	1
A-856	PIN, lock, steering connecting rod bell crank shaft	1
	The following four (4) items to be used to replace pin A-856 for service if original pin has a tendency to loosen due to rough usage.	
645421	PIN, lock, steering connecting rod bell crank	1
54243	NUT, hex., ⅜"-24	1
645430	WASHER, lock pin seat	1
52708	LOCKWASHER, ⅜"	1
630756	PLUG, adjusting, steering connecting rod ball seat (large)	1
630757	PLUG, adjusting, steering connecting rod ball seat (small)	1
5134	PIN, cotter, ⅛" x 1¾" (Ball seat plugs)	2
630753	PLUG, steering connecting rod ball seat spring	2
640186	ROD, connecting, steering **(Up to Serial No. 199079)**	1
646620	ROD, connecting, steering **(After Serial No. 199079)**	1
640176	ROD, connecting, steering, assembly (Includes **Fittings) (Up to Serial No. 199079)**	1
646618	ROD, connecting, steering, assembly **(After Serial No. 199079)**	1
640179	ROD, tie, steering, left (18½" long) **(Up to Serial No. 22972)**	1
642058	ROD, tie, steering, left (17¼" long) **(After Serial No. 22972)**	1
640177	ROD, tie, steering, left, assembly (21" long) **(Up to Serial No. 22972)**	1
642056	ROD, tie, steering, left, assembly (19¾" long) **(After Serial No. 22972)**	1
640180	ROD, tie, steering, right (20⅛" long) **(Up to Serial No. 22972)**	1
642059	ROD, tie, steering, right (18⅞" long) **(After Serial No. 22972)**	1
640181	ROD, tie, steering, right, assembly (25¾" long) **(Up to Serial No. 22972)**	1
642057	ROD, tie, steering, right, assembly (24½" long) **(After Serial No. 22972)**	1
A-858	SEAL, bell crank bearing **(Up to Serial No. 199079)**	2
645663	SEAL, bell crank bearing **(After Serial No. 199079)**	2
630755	SEAT, steering connecting rod ball	3
A-8445	SHAFT, steering bell crank **(Up to Serial No. 199079)**	1
645854	SHAFT, steering bell crank **(After Serial No. 199079) (Use one (1) each 649219 and 649240)**	1
GM-126025	NUT, hex., ⅝"-18 (Bell crank shaft)	1
53570	WASHER, plain, ⅝" (Bell crank shaft)	1
54394	WASHER, plain, ⅞" (Bell crank shaft)	1
649219	SHAFT, steering bell crank **(After Serial No.))**	1
649240	NUT, hex., ⅝"-18 (Lock nut)	1
A-623	SHIELD, dust, steering connecting rod cover	2
A-847	SOCKET, steering tie rod, left, assembly, left rod	1
640178	SOCKET, steering tie rod, left, assembly, right rod	1
A-838	SOCKET, steering tie rod, right, assembly	2
645662	SPACER, bell crank shaft bearing inner race **(After Serial No. 199079)**	1
630754	SPRING, steering connecting rod ball seat	2
A-6305	SPRING, steering tie rod stud	4
642060	WASHER, dust, tie rod socket (rubber)	4
A-860	WASHER, steering connecting rod bell crank shaft, lower	1

CAUTION—Accept And Use Only Genuine Willys-Overland Parts—CAUTION

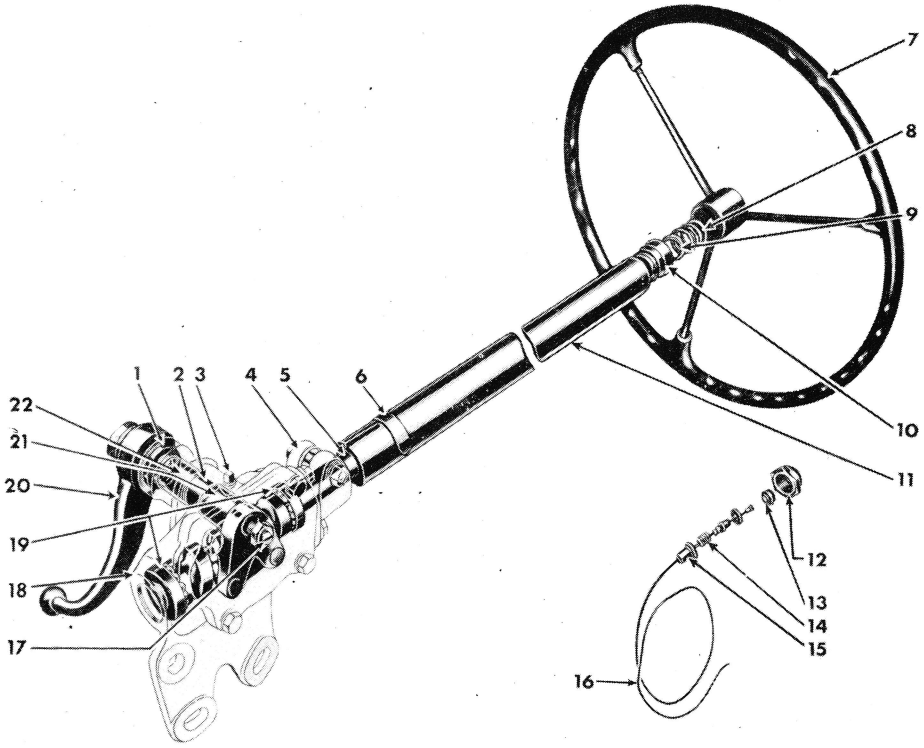

FIG. No. 44—STEERING GEAR

Ref. No.	Part No.	Description	Group No.	Ref. No.	Part No.	Description	Group No.
1	**116698**	Oil Seal and Gasket Set	23-02	12	**A-633**	Nut, horn button	15-17A
2	**A-745**	Levershaft	23-02	13	**A-634**	Button, horn	15-17A
3	**5085**	Plug, filler	23-02	14	**638884**	Spring, horn button	15-17A
4	**A-635**	Clamp and Bolt	23-02	15	**638885**	Cup, spring	15-17A
5	**647693**	Tube and Cam (CJ-3A)	23-02	16	**645741**	Cable, horn **(After Serial No. 178361)**	15-17A
6	**390510**	Cover, oil hole	23-02	17	**639118**	Screw, adjusting	23-02
7	**641970**	Wheel, steering	23-04	18	**646289**	Housing, gear **(After Serial No. 178361)**	23-02
8	**639191**	Spring, column bearing	23-02	19	**639102**	Cup, bearing	23-02
9	**639192**	Seat, spring	23-02	20	**A-1116**	Arm, steering	23-02
10	**639190**	Bearing, column	23-02	21	**639090**	Bushing, inner	23-02
11	**647690**	Column and Bearing (CJ-3A)	23-02	22	**639091**	Bushing, outer	23-02

Part No.	Description	Quan. Req'd. Per Assy.
	GROUP 23-02—STEERING GEAR ASSEMBLY	
640306	**Gear, Steering, W/O Wheel, Assembly (Up to Serial No. 38221) (CJ-2A)**	1
A-1239	**Gear, Steering, W/O Wheel, Assembly (After Serial No. 38221, Up to Serial No. 178361) (CJ-2A)**	1
645744	**Gear, Steering, W/O Wheel, Assembly (After Serial No. 178361) (CJ-2A)**	1
647694	**Gear, Steering, W/O Wheel, Assembly (CJ-3A)**	1
A-1116	ARM, steering gear	1
639115	NUT, hex., 5/8"-18 } Arm to levershaft	1
5038	LOCKWASHER, 5/8" }	1
639104	BALL, steering gear cam (steel)	22
639190	BEARING, steering column, wheel end, assembly	1
639090	BUSHING, steering gear housing, inner	1
639091	BUSHING, steering gear housing, outer	1
A-635	CLAMP, steering column, assembly	1
53749	BOLT, hex. hd., 5/16"-24 x 1 3/4" } Steering column clamp	1
5910	NUT, hex., 5/16"-24 } Steering column clamp	1
52428	LOCKWASHER, 5/16" } Steering column clamp	1
640605	COLUMN and BEARING, steering, assembly **(Up to Serial No. 38221) (CJ-2A)**	1
641251	COLUMN and BEARING, steering, assembly **(After Serial No. 38221, Up to Serial No. 178361) (CJ-2A)**	1
645739	COLUMN and BEARING, steering, assembly **(After Serial No. 178361) (CJ-2A)**	1
647690	COLUMN and BEARING, steering, assembly (CJ-3A)	1
640616	COLUMN with REMOTE CONTROL SHAFT, steering, assembly **(Up to Serial No. 38221)**	1
390510	COVER, oil hole, steering column	1
639116	COVER, side, steering gear housing, assembly	1
639120	BOLT, hex. hd., 5/16"-18 x 2" } Side cover to housing	4
639121	WASHER, flat, 5/16" } Side cover to housing	2
52045	LOCKWASHER, 5/16" } Side cover to housing	2

CAUTION—Accept And Use Only Genuine Willys-Overland Parts—CAUTION

Part No.	Description	Quan. Req'd. Per Assy.
	GROUP 23-02—STEERING GEAR ASSEMBLY (Continued)	
640736	COVER, upper, steering gear housing **(Up to Serial No. 38221)**	1
A-1760	COVER, upper, steering gear housing **(After Serial No. 38221)**	1
639107	BOLT, hex. hd., 5/16"-18 x 3/4" } Upper cover to housing	3
52045	LOCKWASHER, 5/16"	3
639102	CUP, steering gear cam steel balls	2
639119	GASKET, steering gear housing side cover	1
A-740	HOUSING, steering gear, assembly **(Up to Serial No. 178361)**	1
646289	HOUSING, steering gear, assembly **(After Serial No. 178361)**	1
51371	BOLT, hex. hd., 7/16"-20 x 3" (3 required **After Serial No.** .....) } Housing to frame	2
51612	BOLT, hex. hd., 7/16"-20 x 3 3/4"	1
5939	NUT, hex., 7/16"-20	3
638381	WASHER, flat, 1/2" x 1 1/4" O.D. (Use over slotted hole)	1
53027	LOCKWASHER, 7/16"	3
646084	KIT, bearing, steering gear	1
	Consists of:	
639104	22 BALL, cam bearing	
639102	2 CUP, cam bearing	
639119	1 GASKET, side cover	
639103	2 RING, retaining, cam bearing	
639108	2 SHIM, upper cover, .002	
639109	2 SHIM, upper cover, .003	
A-745	LEVERSHAFT, steering gear, assembly	1
116698	OIL SEAL and GASKET SET, steering gear housing	1
5085	PLUG, filler, steering gear housing (1/8" pipe, sq. hd.)	1
51091	PLUG, steering gear housing (1 1/4" expansion)	1
639092	PLUG and TUBE, steering gear oil seal (In lower end of gear housing) **(After Serial No. 178361)**	1
639103	RING, retaining, steering gear cam steel balls	2
639118	SCREW, adjusting, steering gear	1
52925	NUT, hex., 7/16"-20 (Steering gear adjusting screw)	1
639192	SEAT, steering column bearing spring	1
639108	SHIM, steering gear housing upper cover, .002 thick	1
639109	SHIM, steering gear housing upper cover, .003 thick	1
639110	SHIM, steering gear housing upper cover, .010 thick	1
638918	SHIM, steering gear mounting	2
A-1422	SPACER, steering gear to frame bolt	1
639191	SPRING, steering column bearing	1
A-742	TUBE and CAM, steering gear, assembly **(Up to Serial No. 178361)** (CJ-2A)	1
646322	TUBE and CAM, steering gear, assembly **(After Serial No. 178361)** (CJ-2A)	1
647693	TUBE and CAM, steering gear, assembly (CJ-3A)	1
A-17097	WASHER, cork, 1 1/16" I.D. (Under levershaft oil seal)	1
	GROUP 23-03—STEERING GEAR SUPPORT	
A-1277	BUSHING, steering column support	1
A-1276	CLAMP, steering column support	1
53068	BOLT, hex. hd., 5/16"-24 x 3/4" } Clamp to bracket, bracket to instrument panel	4
52626	NUT, hex., 5/16"-24	4
53047	LOCKWASHER, 5/16"	4
638918	SHIM, mounting, steering column	2
A-2859	SUPPORT, steering column	1
53068	BOLT, hex. hd., 5/16"-24 x 3/4" } Support to instrument panel	2
52626	NUT, hex., 5/16"-24	2
53047	LOCKWASHER, 5/16"	2
	GROUP 23-04—STEERING WHEEL	
640760	**Wheel, Steering, Assembly (Use 641970)**	1
641970	**Wheel, Steering, Assembly**	1
A-633	NUT, steering wheel (also horn button Nut)	1

GROUP 24—BRAKE

	GROUP 24-01—HAND BRAKE—EMERGENCY BRAKE	
A-9333	**Brake, Emergency, Assembly (Use 642776)**	1
642776	**Brake, Emergency, Assembly** (Same as A-9333 except painted black)	1
A-10330	BRACKET, adjusting screw, assembly	1
53378	BOLT, hex. hd., 3/8"-24 x 9/16" } Adjusting screw bracket to backing plate	1
5010	LOCKWASHER, 3/8"	1
663264	BRACKET, conduit clamp	1
639010	BRACKET, GUIDE and SPRING, ratchet tube, assembly	1
51396	BOLT, hex. hd., 5/16"-24 x 3/4" } Bracket to support	2
55910	NUT, hex., 5/16"-24	5
5437	WASHER, plain, 5/16"	2
1833	LOCKWASHER, 5/16"	4
A-17253	BUSHING, operating lever	1
640353	CABLE and CONDUIT, ratchet tube, assembly **(Up to Serial No. 183498)**	1
646142	CABLE and CONDUIT, ratchet tube, assembly **(After Serial No. 183498)**	1

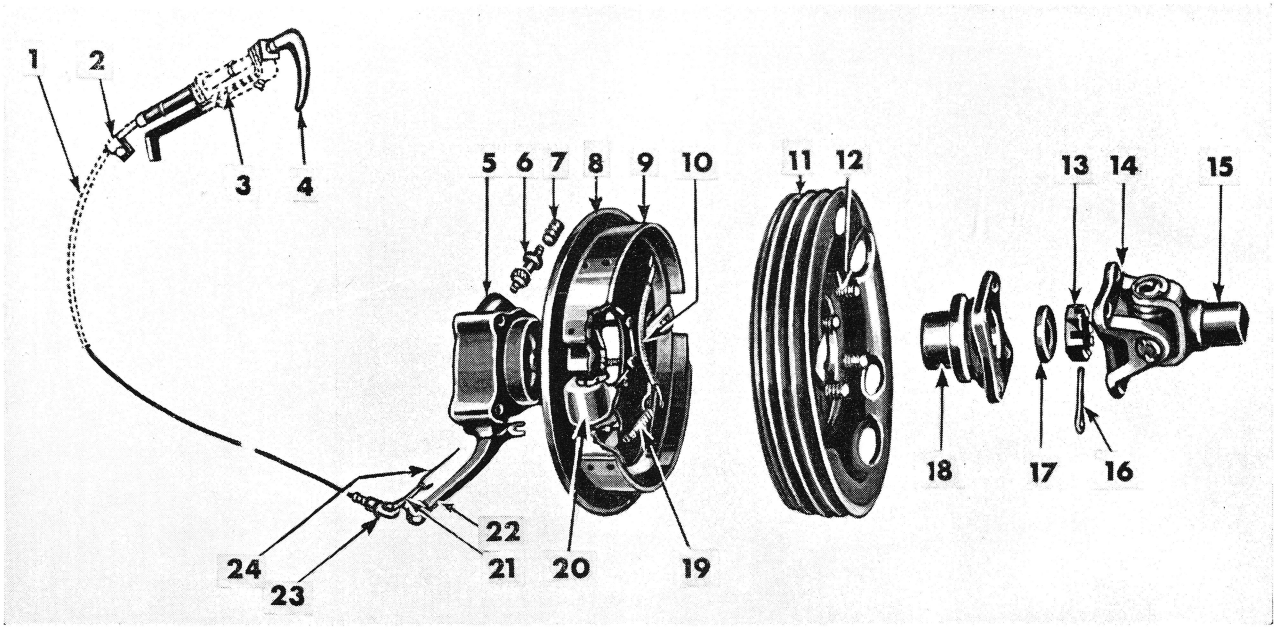

FIG. No. 45—HAND BRAKE

Ref. No.	Part No.	Description	Group No.
1	**646142**	Cable and Conduit **(After Serial No. 183498)**	24-01
2	**A-5393**	Clip, cable	24-01
3	**639010**	Bracket, ratchet	24-01
4	**646141**	Handle and Tube	24-01
5	**A-9330**	Cap, rear	18-02
6	**A-5707**	Gear, speedometer	18-08
7	**636396**	Sleeve, driven gear	18-08
8	**643454**	Plate, backing	24-01
9	**643055**	Shoe and Lining, set	24-01
10	**A-10337**	Spring, shoe retracting	24-01
11	**A-9332**	Drum, brake	24-01
12	**A-6084**	Bolt, brake drum	24-01
13	**A-980**	Nut, flange	18-04
14	**A-950**	Yoke, flange	19-02
15	**A-935**	Yoke, sleeve	19-02
16	**5108**	Pin, cotter	18-04
17	**A-1028**	Washer, hange nut	18-04
18	**116714**	Flange, rear	18-04
19	**A-10338**	Spring, shoe	24-01
20	**A-10330**	Bracket, adjusting screw	24-01
21	**641921**	Clip, retracting, spring	24-01
22	**A-17254**	Lever, operating	24-01
23	**6599**	Clevis, adjusting	24-01
24	**640680**	Link, retracting spring	24-01

Part No.	Description	Quan. Req'd. Per Assy.
	GROUP 24-01—HAND BRAKE—EMERGENCY BRAKE (Continued)	
A-1735	CLAMP, conduit	1
638780	CLAMP, conduit clamp bracket	1
50929	BOLT, hex. hd., 5/16"-24 x 7/8" (Clamp to conduit clamp bracket)	1
5910	NUT, hex., 5/16"-24 (Clamp to conduit clamp bracket)	1
51833	LOCKWASHER, 5/16" (Clamp to conduit clamp bracket)	1
A-8847	CLAMP, conduit to cross member	1
6609	BOLT, hex. hd., 5/16"-24 x 1 1/4" (Clamp to cross member)	1
5910	NUT, hex., 5/16"-24 (Clamp to cross member)	1
51833	LOCKWASHER, 5/16" (Clamp to cross member)	1
6599	CLEVIS, adjustable, 5/16"	1
5910	NUT, hex., 5/16"-24 (Clevis lock)	1
A-5393	CLIP, cable conduit to flywheel housing (closed type 5/16", bolt hole 9/32") (CJ-2A)	1
51763	BOLT, hex. hd., 1/4"-20 x 1/2" (Conduit to bell housing clip CJ-2A)	1
52706	LOCKWASHER, 1/4" (Conduit to bell housing clip CJ-2A)	1
641921	CLIP, hand brake retracting spring	1
A-9332	DRUM, emergency brake	1
A-6084	BOLT, hex. hd., 3/8"-24 x 1 3/8" (Drum to flange)	4
636575	NUT, hex., 3/8"-24 (Drum to flange)	4
5010	LOCKWASHER, 3/8" (Drum to flange)	4
648591	FASTENER, tube, 5/16" (Hand brake cable conduit to bell housing) (CJ-3A)	1
A-10052	GASKET, backing plate to rear bearing cap	1
639244	HANDLE, operating (Black) **(Up to Serial No. 44304)**	1
643123	HANDLE, operating (Chrome) **(After Serial No. 44304)**	1
51904	SCREW, drive, rd. hd., No. 6 x 5/16" (Handle to tube)	2
A-15150	HANDLE and RATCHET TUBE, emergency brake, assembly **(Up to Serial No. 183498)**	1
646141	HANDLE and RATCHET TUBE, emergency brake, assembly **(After Serial No. 183498)**	1
A-10333	LEVER, cam	1
A-17254	LEVER and BUSHING, operating, emergency brake, assembly	1
5781	NUT, hex., 3/8"-24 (Brake operating lever)	1
A-9338	WASHER, plain, 3/8" (Brake operating lever)	1
A-9339	STUD, copper, 3/8"-24 (Brake operating lever)	1

Part No.	Description	Quan. Req'd. Per Assy.
	GROUP 24-01—HAND BRAKE—EMERGENCY BRAKE (Continued)	
A-9340	PIN, cotter, 1/8" x 3/4" (Brake operating lever stud)	1
A-10329	LINING, emergency brake	2
640102	RIVET, tubular, brass, 5/16" x .099 (Lining to shoe)	16
116712	LINING SET, emergency brake	1
	Consists of:	
A-10329	2 LINING, emergency brake	
640102	20 RIVET, lining to shoe	
A-10334	LINK, emergency brake operating lever	1
53538	WASHER, flat, No. 10 (Operating lever link)	2
640680	LINK, retracting spring	1
A-10335	NUT, operating lever (hex., No. 12-28)	1
53379	NUT, lock, hex., No. 12-28 (Operating lever nut)	1
311003	PIN, clevis, 5/16" (Brake cable to operating lever)	1
5354	PIN, cotter, 3/32" x 1/2" (Brake cable to operating lever clevis pin)	1
643454	PLATE, backing, hand brake, assembly	1
A-9336	SCREW, hex. hd., 3/8"-16 x 5/8" (Backing plate to bearing cap)	1
A-9337	SCREW, hex. hd., 3/8"-16 x 2 1/4" (Backing plate to bearing cap)	1
A-9334	SCREW, hex. hd., 3/8"-16 x 2 1/2" (Backing plate to bearing cap)	2
A-1135	WASHER, copper, 3/8" (Backing plate to bearing cap bolts)	4
A-10331	SCREW, adjusting, L.H. thread	1
A-10332	SCREW, adjusting, R.H. thread	1
A-10324	SHOE and LINING, emergency brake, assembly **(Use 643055 Set)**	2
643055	SHOE and LINING SET, emergency brake	1
	Consists of:	
A-10324	2 SHOE and LINING	
A-8848	SPACER, conduit clamp	1
A-10336	SPRING, operating lever spacer	1
635681	SPRING, ratchet tube	1
A-5335	SPRING, retracting, hand brake	1
A-10337	SPRING, shoe return	1
A-10338	SPRING, shoe return, adjusting end	1
663133	SUPPORT, ratchet tube bracket	1
52553	RIVET, rd. hd., 1/4" x 11/16" (Support to dash panel) (CJ-2A)	2
GM-427752	BOLT, hex. hd., 1/4"-20 x 3/4" (Hand bracket ratchet tube bracket support to dash (CJ-3A))	2
54304	NUT, hex., 1/4"-20 (Hand bracket ratchet tube bracket support to dash (CJ-3A))	2
52667	LOCKWASHER, 1/4" (Hand bracket ratchet tube bracket support to dash (CJ-3A))	2

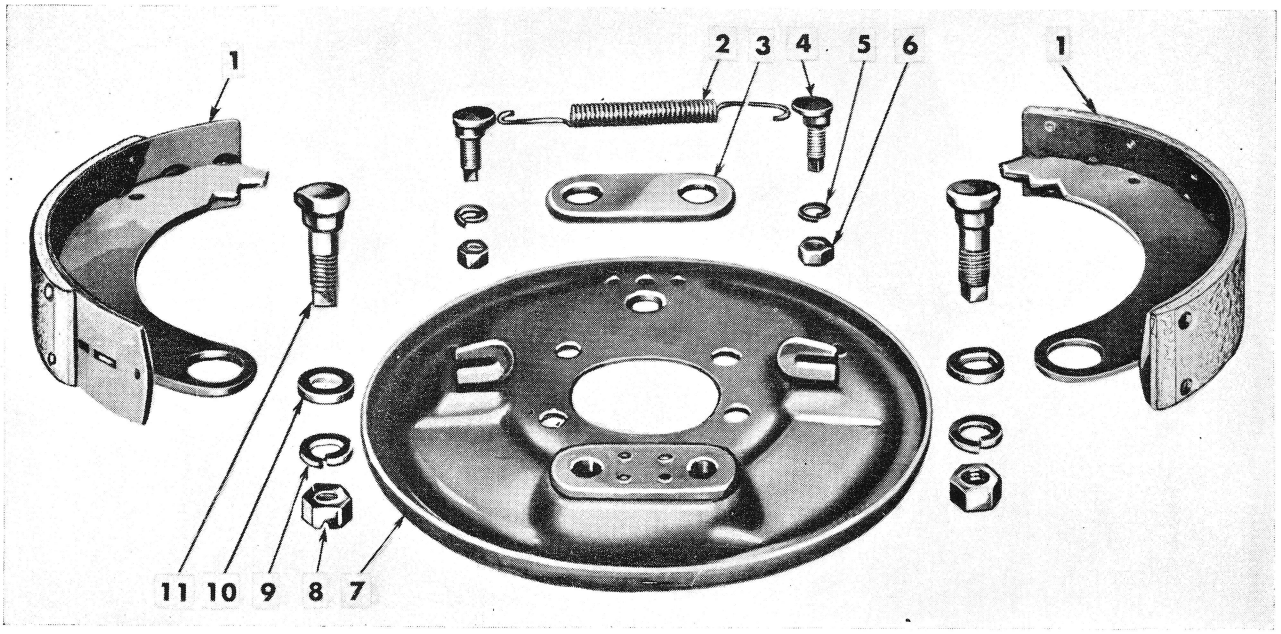

FIG. No. 46—WHEEL BRAKE

Ref. No.	Part No.	Description	Group No.
1	**642967**	Shoe and Lining Set	24-03
2	**637905**	Spring, shoe return	24-04
3	**637901**	Plate, anchor pin	24-04
4	**A-754**	Eccentric	24-04
5	**5010**	Lockwasher, eccentric	24-04
6	**A-755**	Nut, eccentric	24-04
7	**641917**	Plate, backing	24-04
8	**637924**	Nut, anchor pin	24-04
9	**637923**	Lockwasher, anchor pin	24-04
10	**637900**	Cam, anchor pin	24-04
11	**637899**	Pin, anchor	24-04

Part No.	Description	Quan. Req'd. Per Assy.
	GROUP 24-02—WHEEL BRAKE ASSEMBLY	
641923	BRAKE, front left wheel, assembly	1
641924	BRAKE, front right wheel, assembly	1
641927	BRAKE, rear left wheel, assembly	1
641928	BRAKE, rear right wheel, assembly	1
	GROUP 24-03—WHEEL BRAKE SHOES AND LINING	
116551	LINING, brake shoe, forward	4
116552	LINING, brake shoe, reverse	4
374586	RIVET, tubular, brass, 9/64" x 1/4" (Lining to shoe)	80
116600	LINING SET, brake shoe (For two (2) wheels only)	2
	Consists of:	
116551	2 LINING, forward	
116552	2 LINING, reverse	
374586	42 RIVETS, lining to shoe	
647712	LINING SET, brake shoe (.030 O.S. lining) (For two (2) wheels only)	2
	Consists of:	
647713	2 LINING, forward	
647714	2 LINING, reverse	
374586	42 RIVETS, lining to shoe	
642967	SHOE and LINING SET, brake (For two (2) wheels only)	2
	Consists of:	
116549	2 SHOE and LINING, forward	
116550	2 SHOE and LINING, reverse	
647715	SHOE and LINING SET, brake (.030 O.S. lining) (For two (2) wheels only)	2
	Consists of:	
647716	2 SHOE and LINING, forward	
647717	2 SHOE and LINING, reverse	
	GROUP 24-04—WHEEL BRAKE MECHANISM	
637900	CAM, wheel brake anchor pin	8
A-754	ECCENTRIC, wheel brake shoe	8
A-755	NUT, hex., 3/8"-24 } Wheel brake eccentric	8
5010	LOCKWASHER, 3/8" } Wheel brake eccentric	8
637899	PIN, anchor, wheel brake	8
637924	NUT, hex., 1/2"-20 } Wheel brake anchor pin	8
637923	LOCKWASHER, 1/2" } Wheel brake anchor pin	8
641917	PLATE, backing, wheel brake, assembly	4
A-877	BOLT, hex. hd., 3/8"-24 x 3/4" } Front backing plate to steering knuckle	12
5010	LOCKWASHER, 3/8" } Front backing plate to steering knuckle	12
A-903	BOLT, hex. hd., 3/8"-24 x 13/16" **(Up to Serial No. 13453)** } Rear backing plate to flange	12
50878	BOLT, hex. hd., 3/8"-24 x 1 1/8" **(After Serial No. 13453)** } Rear backing plate to flange	12
636575	NUT, hex., 3/8"-24 } Rear backing plate to flange	12
5010	LOCKWASHER, 3/8" } Rear backing plate to flange	12
637901	PLATE, wheel brake anchor pin	8
637905	SPRING, wheel brake shoe return	4
	GROUP 24-05—WHEEL BRAKE CYLINDER	
A-1484	**Cylinder, Front Wheel Brake, Assembly**	2
A-6110	**Cylinder, Rear Wheel Brake, Assembly**	2
53624	BOLT and LOCKWASHER, hex. hd., 1/4"-20 x 3/8" (Cylinder to backing plate)	8
637546	BOOT, front wheel brake cylinder	4
A-6117	BOOT, rear wheel brake cylinder	4
637579	CUP, front wheel brake cylinder	4
A-6116	CUP, rear wheel brake cylinder	4
A-1502	CYLINDER, front wheel brake	2
A-6111	CYLINDER, rear wheel brake	2
115962	KIT, front wheel brake cylinder	1
	Consists of:	
637546	2 BOOT, front wheel brake cylinder	
637579	2 CUP, front wheel brake cylinder	
A-6133	KIT, rear wheel brake cylinder	1
	Consists of:	
A-6117	2 BOOT, rear wheel brake cylinder	
A-6116	2 CUP, rear wheel brake cylinder	
637577	PISTON and SHOE GUIDE, front wheel brake cylinder, assembly	2
A-6113	PISTON and SHOE GUIDE, rear wheel brake cylinder, assembly	2
637540	SCREW, bleeder, wheel brake cylinder **(Use 643841)**	4
643841	SCREW, bleeder, wheel brake cylinder	4
637580	SPRING, front wheel brake cylinder cup **(Use 639949)**	2
639949	SPRING, front wheel brake cylinder cup	2
637545	SPRING, rear wheel brake cylinder cup	2

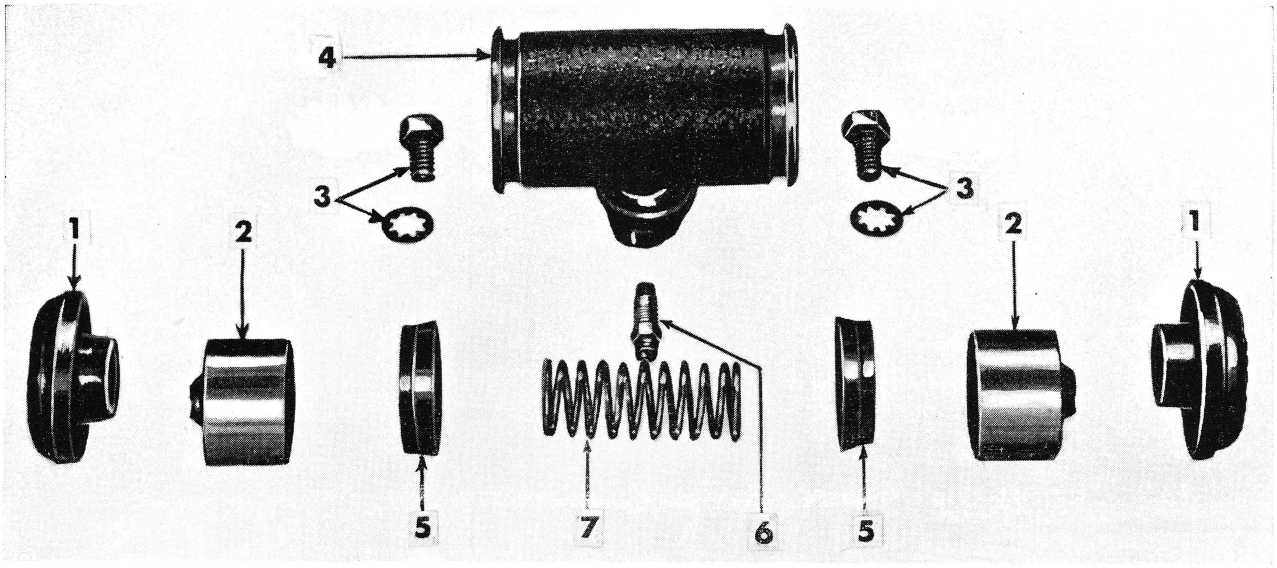

FIG. No. 47—WHEEL BRAKE CYLINDER

Ref. No.	Part No.	Description	Group No.
1	**637546**	Boot	24-05
2	**637577**	Piston, front wheel	24-05
	A-6113	Piston, rear wheel	24-05
3	**53624**	Bolt and Lockwasher	24-05
4	**A-1502**	Cylinder, front wheel	24-05
	A-6111	Cylinder, rear wheel	24-05
5	**637579**	Cup, front wheel	24-05
	A-6116	Cup, rear wheel	24-05
6	**643841**	Screw, bleeder	24-05
7	**639949**	Spring, front wheel	24-05
	637545	Spring, rear wheel	24-05

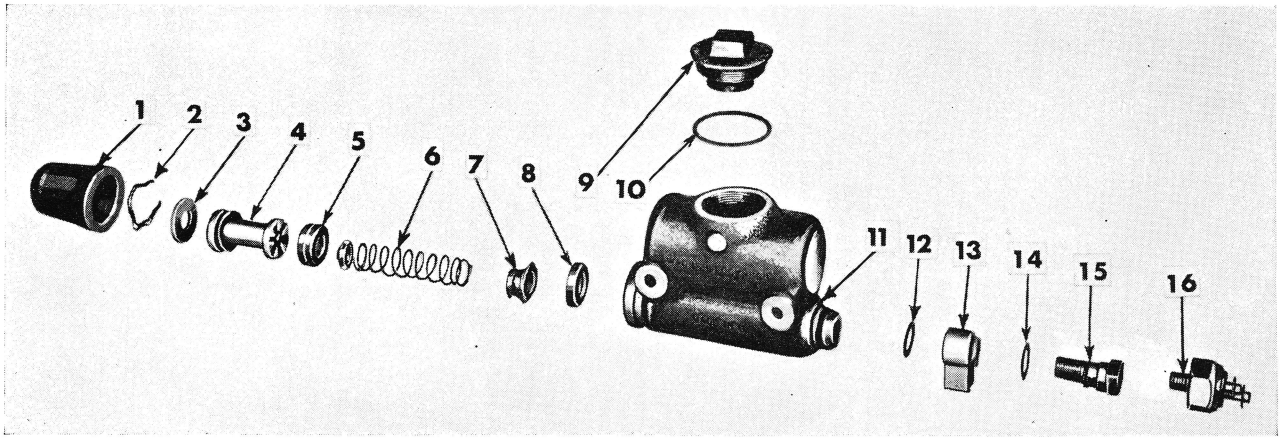

FIG. No. 48—BRAKE, MASTER CYLINDER **(CJ-2A Up to Serial No. 215649)**

Ref. No.	Part No.	Description	Group No.
1	**637602**	Boot	24-06
2	**637598**	Wire, lock	24-06
3	**637597**	Plate, stop	24-06
4	**647286**	Piston	24-06
5	**637590**	Cup, primary	24-06
6	**637587**	Spring and Retainer	24-06
7	**637584**	Valve, check	24-06
8	**637583**	Seat, valve	24-06
9	**637608**	Cap, filler	24-06
10	**637612**	Gasket, filler cap	24-06
11	**637582**	Tank, supply	24-06
12	**637604**	Gasket, fitting	24-06
13	**A-557**	Fitting, outlet	24-06
14	**637606**	Gasket, fitting bolt	24-06
15	**637605**	Bolt, fitting	24-06
16	**A-1271**	Switch, stop light	15-14

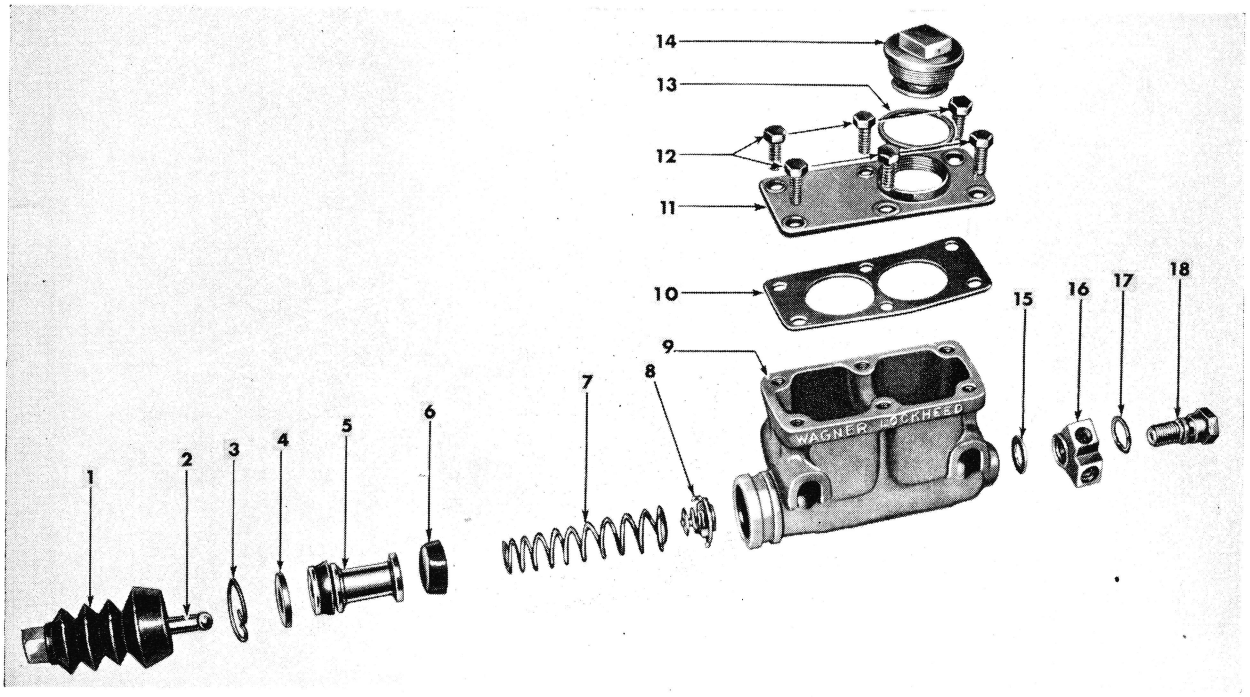

FIG. No. 49—BRAKE, MASTER CYLINDER **(CJ-2A After Serial No. 215649 and All CJ-3A)**

Ref. No.	Part No.	Description	Group No.
1	**647283**	Boot	24-06
2	**647282**	Rod, push	24-06
3	**637598**	Wire, lock	24-06
4	**637597**	Plate, piston stop	24-06
5	**647286**	Piston	24-06
6	**637590**	Cup, primary	24-06
7	**643674**	Spring, valve	24-06
8	**643672**	Valve, check	24-06
9	**649294**	Tank, supply	24-06
10	**647289**	Gasket, cover	24-06
11	**647297**	Cover	24-06
12	**GM-216914**	Bolt, cover	24-06
13	**647285**	Gasket, filler cap	24-06
14	**647284**	Cap, filler	24-06
15	**637604**	Gasket, outlet fitting	24-06
16	**A-557**	Fitting, outlet	24-06
17	**637606**	Gasket, outlet bolt	24-06
18	**637605**	Bolt, outlet fitting	24-06

Part No.	Description	Quan. Req'd. Per Assy.
	GROUP 24-06—BRAKE MASTER CYLINDER (With Cast Iron Body) (Up to Serial No. 215649)—Model CJ-2A	
A-556	**Cylinder, Brake Master, Assembly**	1
51798	BOLT, hex. hd., 5/16"-18 x 3" } Master cylinder to bracket	1
51833	LOCKWASHER, 5/16" } Master cylinder to bracket	1
A-1354	BAR, tie, brake master cylinder	1
52836	BOLT, hex. hd., 5/16"-18 x 3" } Master cylinder tie bar to bracket	1
5910	NUT, hex., 5/16"-18 } Master cylinder tie bar to bracket	1
51833	LOCKWASHER, 5/16" } Master cylinder tie bar to bracket	1
51523	BOLT, hex. hd., 5/16"-18 x 3/4" } Tie bar and shield to master cylinder	1
51833	LOCKWASHER, 5/16" } Tie bar and shield to master cylinder	1
A-183	BOLT, eye, master cylinder	1
5939	NUT, hex., 7/16"-20 (Eye bolt lock)	1
52835	WASHER, plain, 7/16" } Eye bolt to pedal	1
5020	PIN, cotter, 3/32" x 3/4" } Eye bolt to pedal	1
637605	BOLT, master cylinder outlet fitting	1
637602	BOOT, master cylinder	1
A-1341	BRACKET, master cylinder to frame	1
637608	CAP, filler, master cylinder	1
663462	COVER, inspection, brake master cylinder	1
53382	BOLT, hex. hd., 1/4"-20 x 1/2" } Cover to floor pan	5
53058	LOCKWASHER, 1/4" } Cover to floor pan	5
637586	CUP, master cylinder check valve (rubber)	1
637590	CUP, primary, master cylinder	1
637595	CUP, secondary, master cylinder	1
A-557	FITTING, outlet, master cylinder	1
637612	GASKET, master cylinder filler cap	1
637604	GASKET, master cylinder outlet fitting	1
637606	GASKET, master cylinder outlet fitting bolt	1
A-7838	KIT, brake master cylinder **(Use 115961)**	1
115961	KIT, repair, brake master cylinder	1

Part No.	Description	Quan. Req'd. Per Assy.
	GROUP 24-06—BRAKE MASTER CYLINDER (Continued)	
	Consists of:	
637602	1 BOOT	
637590	1 CUP, primary	
637591	1 PISTON Assembly	
637583	1 SEAT, master cylinder valve	
637584	1 VALVE, check, assembly	
637598	1 WIRE, lock, piston stop	
637591	PISTON, master cylinder, assembly **(Up to Serial No. 196662)**	1
647286	PISTON, master cylinder, assembly **(After Serial No. 196662)**	1
637597	PLATE, master cylinder piston stop	1
637585	RETAINER, master cylinder check valve cup	1
637599	ROD, push, master cylinder, assembly	1
637583	SEAT, master cylinder valve	1
640597	SHIELD, master cylinder, assembly	1
637587	SPRING and RETAINER, return, master cylinder piston, assembly **(Use 647492)**	1
647492	SPRING, RETAINER and CHECK VALVE, master cylinder, assembly **(After Serial No. 196662)**	1
637582	TANK, supply, master cylinder	1
637584	VALVE, check, master cylinder, assembly **(Use 647492)**	1
637598	WIRE, lock, master cylinder piston stop	1
	(With Aluminum Body) (After Serial No. 215649)—Models CJ-2A and CJ-3A	
	All items not listed are same as indicated for cylinder with cast iron body.	
647558	**Cylinder, Brake Master, Assembly**	1
647592	BAR, tie, master cylinder	1
51883	BOLT, hex. hd., 3/8"-24 x 3" } Master cylinder tie bar and shield attaching	1
5010	LOCKWASHER, 3/8"	2
647606	BOLT, eye, master cylinder	1
647283	BOOT, master cylinder	1
647284	CAP, filler, master cylinder	1
647297	COVER, master cylinder	1
GM-216914	BOLT, hex. hd., 1/4"-20 x 5/8" (Master cylinder cover to tank)	6
647289	GASKET, master cylinder cover	1
647285	GASKET, master cylinder filler cap	1
647287	KIT, repair, master cylinder	1
	Consists of:	
647283	1 BOOT	
637590	1 CUP, primary	
647286	1 PISTON Assembly	
643672	1 VALVE, check, assembly	
637598	1 WIRE, lock, piston stop	
647286	PISTON, master cylinder, assembly	1
647282	ROD, push, master cylinder	1
640597	SHIELD, master cylinder, assembly	1
643674	SPRING, master cylinder valve, assembly	1
647288	TANK, supply, master cylinder	1
649294	TANK, supply, master cylinder, assembly	1
	Consists of:	
647297	1 COVER, master cylinder	
648277	6 SCREW, hex. hd., No. 14 x 3/4" (Master cylinder cover to tank)	
647289	1 GASKET, master cylinder cover	
647288	1 TANK, supply, master cylinder	
643672	VALVE, check, master cylinder, assembly	1
	GROUP 24-07—BRAKE LINES	
A-1283	BRACKET, mounting, front brake hose (front end)	2
A-5227	BRACKET, rear axle brake tube tee **(Up to Serial No. 13453)**	1
640944	BRACKET, rear axle brake tube tee **(After Serial No. 13453)**	1
A-1515	CLAMP, axle brake tube (2 required **After Serial No. 13453)**	3
640941	CLAMP, axle brake tube (left brake tube to rear axle) **(After Serial No. 13453)**	1
54063	SCREW, rd. hd., No. 10-32 x 1 1/4" } Brake tube clamp	3
6273	NUT, sq., No. 10-32	3
A-1378	CLIP, brake pipe, 5/16" (closed type)	2
637427	CLIP, spring lock, brake hose to bracket	6
637439	CLIP, tube, 1/4" **(Up to Serial No. 13453)**	1
639274	CLIP, tube, 1/4" (under axle housing cover bolt) **(After Serial No. 13453)**	1
A-5449	CLIP, tube, 5/16" (Brake tube to side rail and cross member) **(Up to Serial No. 215649)**	3
645539	CLIP, tube, 3/16" (Brake tubes to frame **(After Serial No. 215649)**	4
52840	BOLT, hex. hd., No. 10 x 1/2" (Clip to master cylinder)	1
5064	SCREW, rd. hd., No. 10-24 x 5/8" } Brake tube and wiring clip to side rail	2
6352	NUT, hex., No. 10-24	2
52221	LOCKWASHER, No. 10	2
52839	CLIP, tube to side rail	2
637426	GASKET, fitting, brake hose	2
A-1457	GUARD, front wheel brake hose, assembly	2
A-15802	HOSE, front axle tube to front brake tube (6" long)	2
A-15801	HOSE, master cylinder tube to front brake tube (11" long)	1

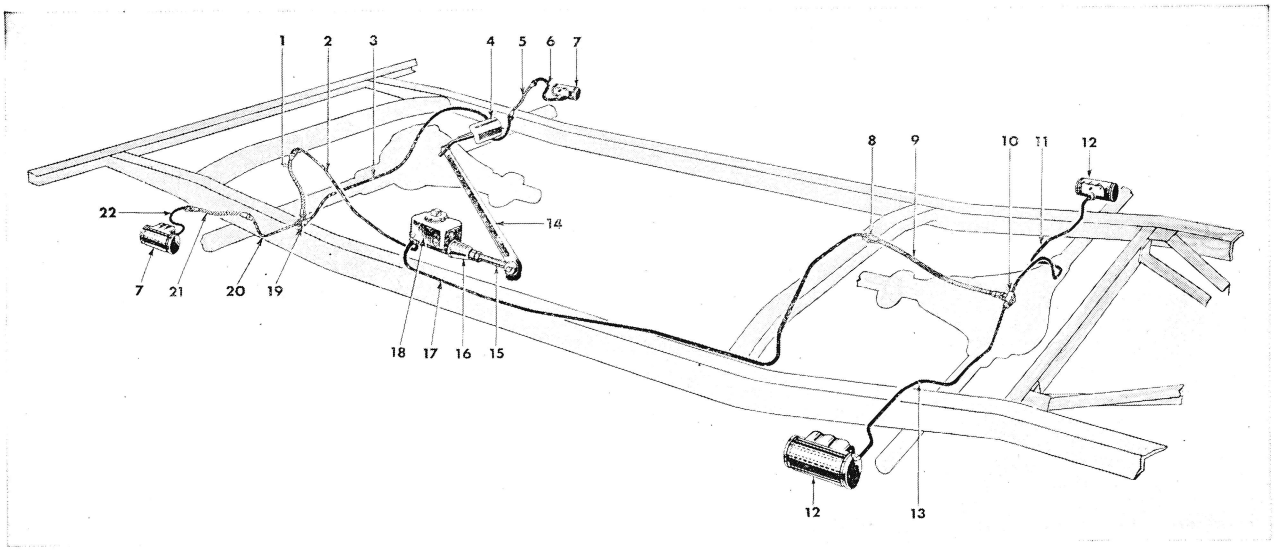

FIG. No. 50—BRAKE SYSTEM (CJ-2A)

Ref. No.	Part No.	Description	Group No.	Ref. No.	Part No.	Description	Group No.
1	**A-15801**	Hose, brake	24-07	12	**A-6110**	Cylinder, rear brake	24-05
2	**A-1377**	Tube, brake	24-07	13	**640942**	Tube, brake	24-07
3	**A-1376**	Tube, brake	24-07	14	**647636**	Pedal, brake	24-08
4	**645574**	Pad, brake pedal	24-08	15	**A-183**	Bolt, eye	24-06
5	**A-15802**	Hose, brake	24-07	16	**637602**	Boot, master cylinder	24-06
6	**A-1488**	Tube, brake	24-07	17	**A-5224**	Tube, brake	24-07
7	**A-1484**	Cylinder, front brake	24-05	18	**A-556**	Cylinder, master	24-06
8	**637427**	Clip, brake hose	24-07	19	**637432**	Tee, brake tube	24-07
9	**A-15803**	Hose, rear brake	24-07	20	**A-1501**	Tube, brake	24-07
10	**637432**	Tee, brake tube	24-07	21	**A-15802**	Hose, front brake	24-07
11	**640943**	Tube, brake	24-07	22	**A-1488**	Tube, brake	24-07

Part No.	Description	Quan. Req'd. Per Assy.
	GROUP 24-07—BRAKE LINES (Continued)	
A-15803	HOSE, master cylinder tube to rear axle tee (15″ long)	1
384710	NUT, inverted flared tube (hex., 3/16″)	16
637432	TEE, axle brake tube	2
6188	BOLT, hex. hd., 1/4″-20 x 1/2″ (Tee to axle)	2
52706	LOCKWASHER, 1/4″	2
A-1377	TUBE, brake master cylinder to front hose, 21.81″, assembly—CJ-2A	1
647915	TUBE, brake master cylinder to front hose, L.H.D.—CJ-3A	1
A-5224	TUBE, brake master cylinder to rear hose, 62.94″, assembly **(Up to Serial No. 215649)**	1
647544	TUBE, brake master cylinder to rear hose (Use with master cylinder having aluminum body) **(After Serial No. 215649)**	1
A-1501	TUBE, tee to front brake hose, 6.5″, left, assembly	1
A-1376	TUBE, tee to front brake hose, 33.12″, right, assembly	1
A-5225	TUBE, tee to left rear brake, 27.38″, assembly **(Up to Serial No. 13453)**	1
640942	TUBE, tee to left rear brake, 22 3/8″, assembly **(After Serial No. 13453)**	1
A-5226	TUBE, tee to right rear brake, 28.81″, assembly **(Up to Serial No. 13453)**	1
640943	TUBE, tee to right rear brake, 21 5/8″, assembly **(After Serial No. 13453)**	1
A-1488	TUBE, wheel cylinder to axle hose, 5.72″, assembly	2
	GROUP 24-08—BRAKE PEDAL AND LINKAGE	
	Note: For parts not appearing here see **Clutch Control Parts Group.**	
641755	**Pedal, Brake, Assembly (Use 647636)**	1
647636	**Pedal, Brake, Assembly**	1
A-185	BRACKET, brake pedal retracting spring	1
663539	BRACKET, brake pedal spring	1
5267	RIVET, rd. hd., 5/16″ x 3/4″ (Bracket to frame cross member)	1
640038	FITTING, brake pedal lubricating **(Up to Serial No. 11825)**	1
392909	FITTING, brake pedal lubricating **(After Serial No. 11825)** (Int'ch'ble with 646906)	1
646906	FITTING, brake pedal lubricating (Int'ch'ble with 392909)	1
A-8477	PAD, brake pedal, assembly **(Use 645574)**	1
641932	PAD, brake pedal, assembly **(Use 645574)**	1
645574	PAD, brake pedal, assembly **(After Serial No. 179770)**	1
A-6359	PAD, brake pedal shank draft	1
A-493	RETAINER, pedal shaft	1
A-495	SHAFT, brake pedal, assembly	1
650684	SPRING, brake pedal shank draft pad	1

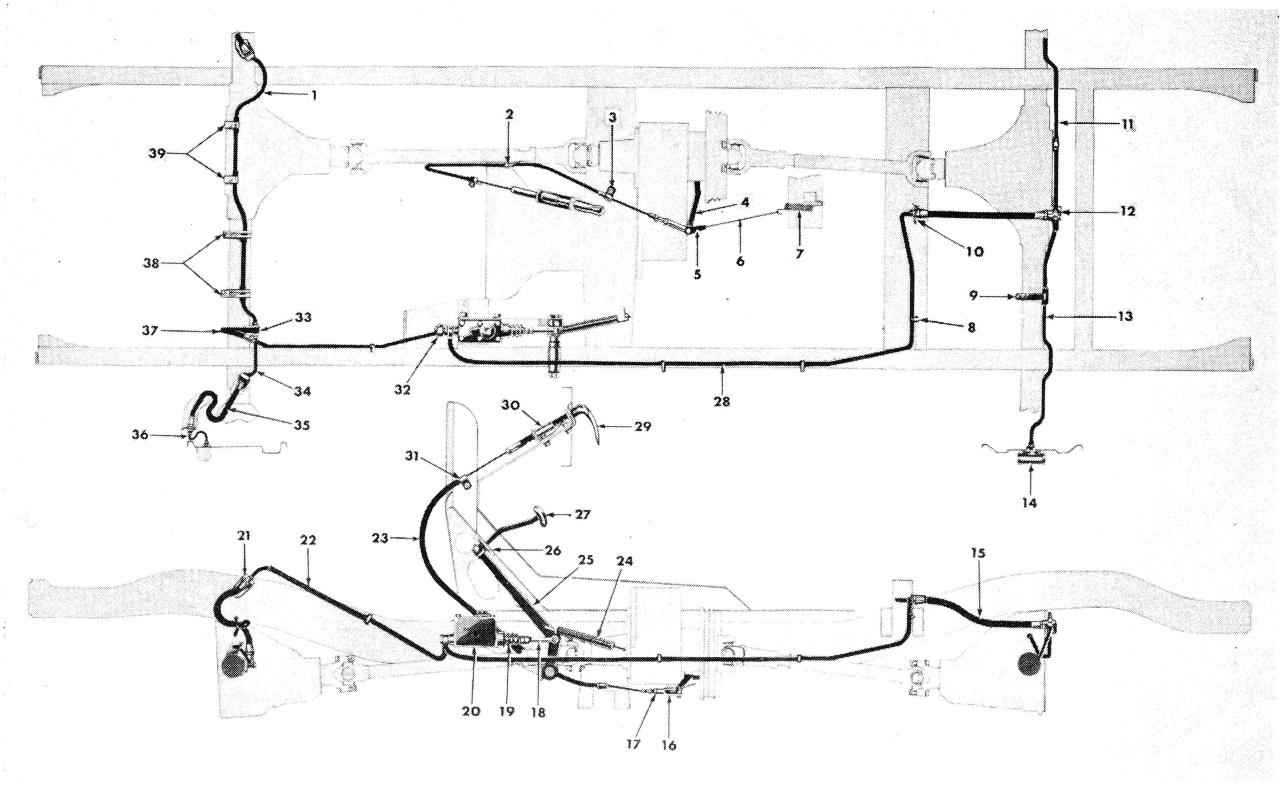

FIG. No. 51—BRAKE SYSTEM (CJ-3A)

Ref. No.	Part No.	Description	Group No.
1	**A-1376**	Tube, brake	24-07
2	**648591**	Fastener, conduit	24-01
3	**A-8847**	Clamp, conduit	24-01
4	**A-17254**	Lever and bushing	24-01
5	**641921**	Clip, spring	24-01
6	**640680**	Link, retracting spring	24-01
7	**A-5335**	Spring, retracting	24-01
8	**645539**	Clip, tube	24-07
9	**640941**	Clamp, tube	24-07
10	**637427**	Clip, spring lock	24-07
11	**640943**	Tube, brake	24-07
12	**637432**	Tee, tube	24-07
13	**640942**	Tube, brake	24-07
14	**A-6110**	Cylinder, rear brake	24-05
15	**A-15803**	Hose, rear brake	24-07
16	**6599**	Clevis, adjustable	24-01
17	**5910**	Nut, lock	24-01
18	**647606**	Bolt, eye	24-06
19	**647283**	Boot, master cylinder	24-06
20	**647558**	Cylinder, master	24-06
21	**637427**	Clip, spring lock	24-07
22	**647915**	Tube, brake	24-07
23	**646142**	Cable and conduit	24-01
24	**630593**	Spring, retracting	24-08
25	**647636**	Pedal, brake	24-08
26	**A-6359**	Pad, draft	24-08
27	**645574**	Pad, brake pedal	24-08
28	**647544**	Tube, brake	24-07
29	**646141**	Handle and Tube	24-01
30	**639010**	Bracket, ratchet tube	24-01
31	**638780**	Clamp, conduit	24-01
32	**647801**	Switch, stop light	15-14
33	**637432**	Tee, tube	24-07
34	**A-1501**	Tube, brake	24-07
35	**A-15802**	Hose, front brake	24-07
36	**A-1488**	Tube, brake	24-07
37	**A-15801**	Hose, front brake	24-07
38	**A-1515**	Clamp, tube	24-07
39	**A-1378**	Clip, tube	24-07

Part No.	Description	Quan. Req'd. Per Assy.
	GROUP 24-08—BRAKE PEDAL AND LINKAGE (Continued)	
630593	SPRING, retracting, brake pedal	1
A-6360	WASHER, brake pedal shank draft pad	1
	GROUP 24-09—BRAKE FLUID	
637437	FLUID, hydraulic brake (12 oz. container)	1

GROUP 25—WHEELS

GROUP 25-01—WHEELS OR RIMS AND DISCS

640800	**Rim and Disc, 16 x 4.50, Assembly**	5
642053	**Rim and Disc, 15 x 4.50, Assembly** (Special equipment to accommodate 15 x 7.00 tires)	5
A-473	BOLT, hex. hd., ½"-20 L.H. thd., wheel hub	10
A-474	BOLT, hex. hd., ½"-20 R.H. thd., wheel hub	10
641952	NUT, hex., ½"-20 L.H. thd., wheel hub bolt **Up to Serial No. 168642**	10
641953	NUT, hex., ½"-20 R.H. thd., wheel hub bolt	10
636035	NUT, hex., ½"-20 L.H. thd., wheel hub bolt **After Serial No. 168642**	10
635516	NUT, hex., ½"-20 R.H. thd., wheel hub bolt	10

Part No.	Description	Quan. Req'd. Per Assy.
	GROUP 25-02—HUBS AND DRUMS	
641920	CAP, wheel hub	4
640651	DRUM, front and rear wheel brake	4
640864	HUB, rear **(After Serial No. 13453)**	2
A-1691	HUB and BEARING CUPS, front and rear **(Use 640672)**	4
	front only	2
640672	HUB and BEARING CUPS, front and rear **(Up to Serial No. 13453)**	4
	front only **(After Serial No. 13453)**	2
641925	HUB and DRUM, left front wheel, assembly **(All Trucks)**	1
	left rear wheel **(Up to Serial No. 13453)**	1
640936	HUB and DRUM, left rear wheel, assembly **(After Serial No. 13453)**	1
641926	HUB and DRUM, right front wheel, assembly **(All Trucks)**	1
	right rear wheel **(Up to Serial No. 13453)**	1
640937	HUB and DRUM, right rear wheel, assembly **(After Serial No. 13453)**	1
636374	KEY, rear axle shaft (Hub to axle) **(After Serial No. 13453)**	2
	GROUP 25-03—BEARINGS, SEALS AND RETAINERS	
	(For Front and Rear Wheels—Up to Serial No. 13453 and Front Wheels Only—After Serial No. 13453)	
52942	CONE and ROLLERS, wheel bearing, assembly (Bore, 1.625 x 11/16")	8
52943	CUP, wheel bearing cone and rollers (2.875 O.D. x 1/2" thick)	8
A-865	LOCKWASHER, wheel bearing (2 3/16" O.D., 1 41/64" I.D.)	4
A-867	LOCKWASHER, wheel bearing nut (2 9/16" O.D., 1 41/64" I.D.)	4
636569	NUT, axle shaft (hex., 3/4"-16)	4
A-866	NUT, retaining, wheel bearing (2 1/16" hex., 1 5/8"-16 thd.)	8
A-864	OIL SEAL, wheel hub grease, assembly	2
636571	PIN, axle shaft nut (cotter, 7/64" x 1 1/2")	4
636570	WASHER, axle shaft nut (1 1/8" x 49/64" x 1 1/2")	4
	GROUP 25-03A—BEARINGS, SEALS AND RETAINERS	
	For Rear Wheels Only—After Serial No. 13453)	
52799	CONE and ROLLERS, rear axle shaft bearing	2
52800	CUP, rear axle shaft bearing	2
640886	GASKET, rear brake grease protector	2
636344	NUT, axle shaft (hex., 1"-14)	2
5397	PIN, axle shaft nut (cotter, 1/8" x 1 1/2")	4
640888	PROTECTOR, grease, rear brake	2
640885	RETAINER, axle shaft, grease outboard, assembly	2
636372	WASHER, felt, axle shaft grease retainer	2
640945	WASHER, rear axle shaft	2

GROUP 26—FRAME

GROUP 26-01—FRAME ASSEMBLY (Up to Serial No. 199079)—Model CJ-2A

Part No.	Description	Quan. Req'd. Per Assy.
640218	**Frame Assembly (Use 648644)**	1
A-415	BRACKET, front intermediate cross member	2
52832	RIVET, rd. hd., 3/8" x 7/8" (Bracket and spacer to frame)	6
A-1150	CROSS MEMBER, frame, center	1
52832	RIVET, rd. hd., 3/8" x 7/8" (Center cross member to side rail)	2
640214	CROSS MEMBER, frame, front intermediate (Rear engine support)	1
50151	BOLT, hex. hd., 3/8"-24 x 7/8" } Cross member to bracket	6
5901	NUT, hex., 3/8"-24 } Cross member to bracket	6
52101	WASHER, flat, 3/8" } Cross member to bracket	2
5010	LOCKWASHER, 3/8" } Cross member to bracket	6
640219	CROSS MEMBER, frame, rear	1
52906	RIVET, fl. hd., 3/8" x 3/4" (Rear cross member to frame)	8
A-15737	GUSSETT, frame rear cross member	2
A-548	NUT, clinch, 5/16"-24	9
A-549	NUT, clinch, 3/8"-24	13
A-637	OUTRIGGER, body, rear	4
50769	RIVET, rd. hd., 3/8" x 3/4" (Body outrigger to frame side rail)	8
A-534	PLATE, reinforcement, frame, rear	1
52906	RIVET, fl. hd., 3/8" x 3/4" (Reinforcement plate to cross member and frame)	2
640689	PLATE, skid, under frame	1
52945	BOLT, rd. hd., 3/8"-16 x 7/8" } Skid plate to front intermediate cross member	4
5544	NUT, hex., 3/8"-16 } Skid plate to front intermediate cross member	4
52101	WASHER, plain, 3/8" } Skid plate to front intermediate cross member	4
5010	LOCKWASHER, 3/8" } Skid plate to front intermediate cross member	4
640225	REINFORCEMENT, frame, rear	1
52906	RIVET, fl. hd., 3/8" x 3/4" (Reinforcement to side rail)	2
A-416	SPACER, frame front intermediate cross member bracket	2
52832	RIVET, rd. hd., 3/8" x 7/8" (Spacer to frame)	6
640743	SPACER, snow plow bolt	2
645232	TUBE and BELL CRANK BRACKET, cross, front, assembly	1

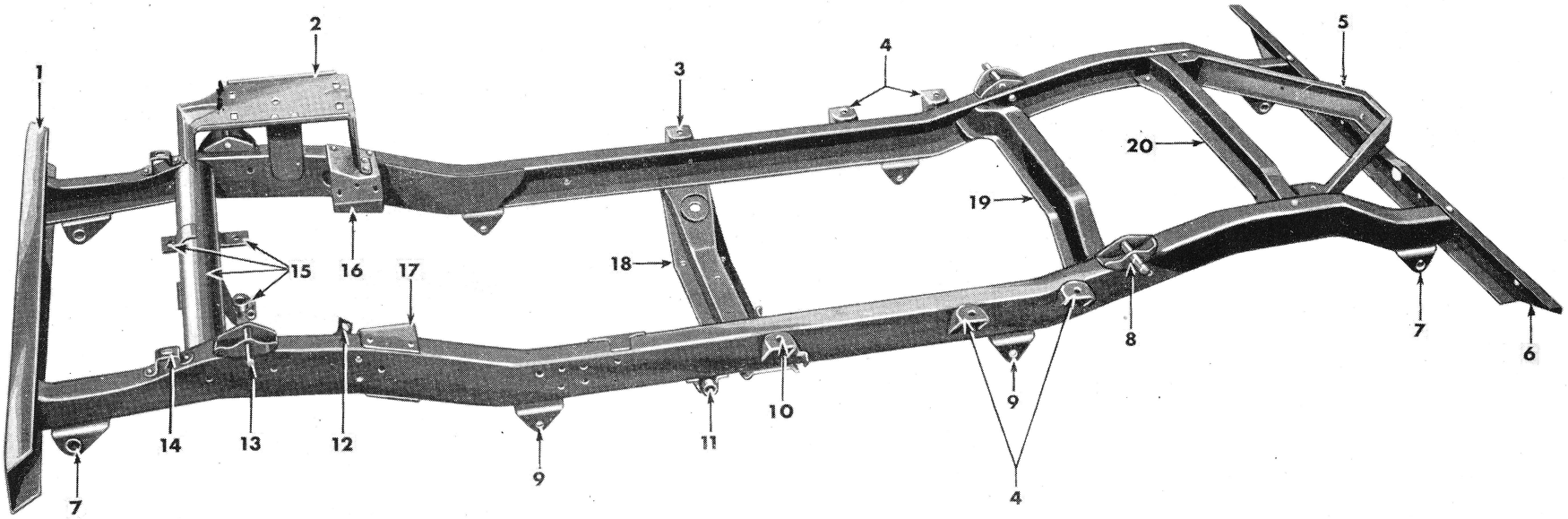

FIG. No. 52—FRAME (CJ-3A)

Ref. No.	Part No.	Description	Group No.
1	**645119**	Bar, front bumper	32-01
2	**647306**	Support and Brace, battery	26-01
3	**645071**	Outrigger, right, No. 1	26-01
4	**645072**	Outrigger, left and right, No. 2 and 3	26-01
5	**647418**	Reinforcement, rear	26-01
6	**646941**	Crossmember, rear	26-01
7	**A-544**	Bracket, shackle, front and rear spring	26-01
8	**647350**	Bracket, rear shock absorber	26-01
9	**A-500**	Bracket, pivot, front and rear spring	26-01
10	**645702**	Outrigger, left, No. 1	26-01
11	**645086**	Bracket, retainer, pedal shaft	26-01
12	**A-1283**	Bracket, front brake hose	26-01
13	**647454**	Bracket, front shock absorber	26-01
14	**646932**	Bracket, radiator guard	26-01
15	**647310**	Tube and Bracket, front	26-01
16	**647025**	Bracket, support, engine, right	26-01
17	**647919**	Bracket, support, engine, left	26-01
18	**647016**	Support, rear engine	26-01
19	**A-1150**	Crossmember, center	26-01
20	**646942**	Crossmember, intermediate, rear	26-01

Part No.	Description	Quan. Req'd. Per Assy.
	GROUP 26-01—FRAME ASSEMBLY (Continued)	
	(After Serial No. 199079 up to Serial No. 215649)—Model CJ-2A	
647048	**Frame Assembly (Use 648646)** (Same as frame 640218 except 647009 bell crank bracket replaces 640208 to accommodate inverted bell crank)	1
	(After Serial No. 215649, Up to Serial No. .....)—Model CJ-2A	
	Revised design and to accommodate inverted steering bell crank.	
646950	**Frame Assembly (Use 648645)**	1
A-185	BRACKET, brake pedal retracting spring	1
640206	BRACKET, engine stay cable, rear	1
A-1283	BRACKET, front brake hose to frame	1
647027	BRACKET, front support, engine, left	1
647025	BRACKET, front support, engine, right, assembly	1
A-500	BRACKET, pivot, front spring rear and rear spring front	4
646932	BRACKET, radiator guard to frame	2
645083	BRACKET, rear shock absorber, inner	2
645086	BRACKET, retainer, pedal shaft, assembly	1
A-544	BRACKET, shackle, assembly, front spring front and rear spring rear	4
647009	BRACKET, steering bell crank	1
646933	BRACKET, support, body, rear	2
647454	BRACKET and SHAFT, front shock absorber, assembly	2
647350	BRACKET and SHAFT, rear shock absorber, assembly	2
A-481	BUMPER, frame, front and rear axle	4
51396	BOLT, hex. hd., 5/16"-24 x 3/4" } Bumper to frame	8
5910	NUT, hex., 5/16"-24 } Bumper to frame	4
51833	LOCKWASHER, 5/16" } Bumper to frame	8
A-1150	CROSS MEMBER, frame, center	1
646941	CROSS MEMBER, frame, rear	1
646942	CROSS MEMBER, frame, rear intermediate	1
647016	CROSS MEMBER, support, engine, rear, assembly	1
50151	BOLT, hex. hd., 3/8"-24 x 7/8" } Rear engine support cross member to frame	4
5901	NUT, hex., 3/8"-24 } Rear engine support cross member to frame	4
52101	WASHER, plain, 3/8" } Rear engine support cross member to frame	4
5010	LOCKWASHER, 3/8" } Rear engine support cross member to frame	4
A-914	CUP, retaining, transfer case insulator	1
A-548	NUT, clinch, 5/16"-24	5
A-549	NUT, clinch, 3/8"-24	11
A-668	NUT, grommet, 1/4"-28	2
645702	OUTRIGGER, body, left, No. 1, assembly	1
645072	OUTRIGGER, body, left and right, No. 2 and No. 3	4
645071	OUTRIGGER, body, right, No. 1	1
A-534	PLATE, reinforcement, frame, rear	1
640689	PLATE, skid, under frame	1
52945	BOLT, rd. hd., 3/8"-16 x 7/8" } Skid plate to frame intermediate cross member	4
5544	NUT, hex., 3/8"-16 } Skid plate to frame intermediate cross member	4
52101	WASHER, plain, 3/8" } Skid plate to frame intermediate cross member	4
5010	LOCKWASHER, 3/8" } Skid plate to frame intermediate cross member	4
647418	REINFORCEMENT, frame, rear	1
647415	SPACER, snow plow bolt	2
647089	SPACER, steering gear to frame bolt	1
647306	SUPPORT and BRACE, battery, assembly	1
647310	TUBE and BELL CRANK BRACKET, cross, front, assembly	1
647910	**Frame Assembly—Model CJ-3A (Up to Serial No. .....) (For Bottom Mounted Radiator)**	1
	This frame is same as 646950 with the following exception:	
647919	BRACKET, support, engine, front, left	1
649241	**Frame Assembly—Model CJ-3A (After Serial No. .....) (For Side Mounted Radiator)**	1
648644	KIT, frame for service as replacement for frame 640218 **(Up to Serial No. 199079)**—Model CJ-2A	1
	Consists of:	
648441	1 FRAME ASSEMBLY	
647913	1 ADAPTER, engine mounting bracket	
5934	2 BOLT, hex. hd., 5/16"-24 x 1"	
51308	1 BOLT, hex. hd., 5/16"-24 x 2"	
5910	3 NUT, hex., 5/16"-24	
52274	3 WASHER, plain, 5/16"	
51833	3 LOCKWASHER, 5/16"	
647915	1 TUBE, brake, assembly	
648646	KIT, frame for service as replacement for frame 647048 **(After Serial No. 199079, Up to Serial No. 215649)**—Model CJ-2A	1
	Consists of:	
648442	1 FRAME ASSEMBLY	
647913	1 ADAPTER, engine mounting bracket	
5934	2 BOLT, hex. hd., 5/16"-24 x 1"	
51308	1 BOLT, hex. hd., 5/16"-24 x 2"	
5910	3 NUT, hex., 5/16"-24	

Part No.	Description	Quan. Req'd. Per Assy.
	GROUP 26-01—FRAME ASSEMBLY (Continued)	
52274	3 WASHER, plain, 5/16"	
51833	3 LOCKWASHER, 5/16"	
647915	1 TUBE, brake, assembly	
648645	KIT, frame for service as replacement for frame 646950 **(After Serial No. 215649)**	1
	Consists of:	
647910	1 FRAME ASSEMBLY	
647913	1 ADAPTER, engine mounting bracket	
5934	2 BOLT, hex. hd., 5/16"-24 x 1"	
51308	1 BOLT, hex. hd., 5/16"-24 x 2"	
5910	3 NUT, hex., 5/16"-24	
52274	3 WASHER, plain, 5/16"	
51833	3 LOCKWASHER, 5/16"	
647915	1 TUBE, brake, assembly	

GROUP 27—SPRINGS

GROUP 27-01—FRONT SPRING

A-612	**Spring, Front, Assembly** (8 leaves)	2
116711	BOLT and NUT, center, front spring, assembly	2
359039	BUSHING, front spring	2

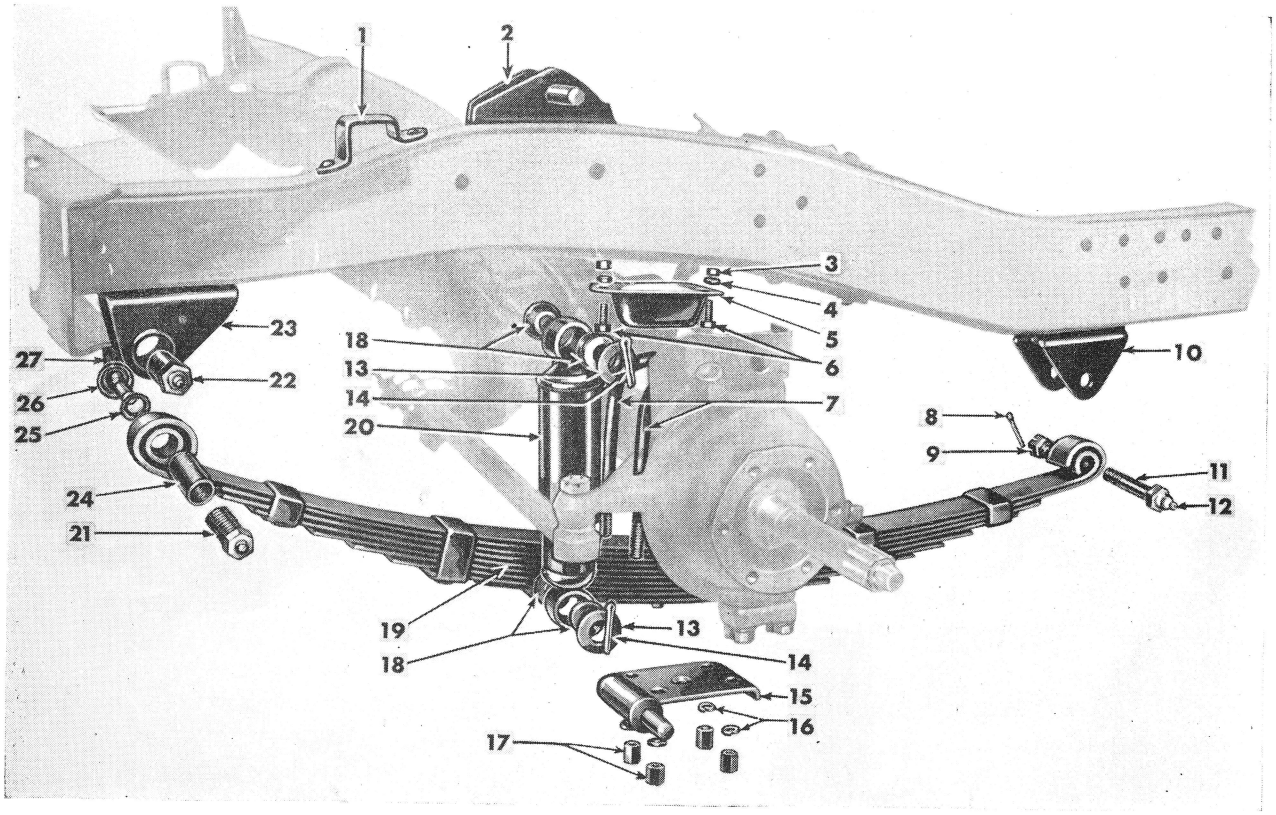

FIG. No. 53—FRONT SPRING AND SHOCK ABSORBER

Ref. No.	Part No.	Description	Group No.
1	**646932**	Bracket, radiator guard to frame	26-01
2	**647454**	Bracket and Shaft	26-01
3	**5910**	Nut, bumper to frame	26-01
4	**51833**	Lockwasher, bumper to frame	26-01
5	**A-481**	Bumper, axle	26-01
6	**51396**	Bolt, bumper to frame	26-01
7	**A-575**	Clip, left	27-03
8	**A-5021**	Pin, cotter, pivot bolt	27-03
9	**53733**	Nut, pivot bolt	27-03
10	**A-500**	Bracket, pivot	26-01
11	**384228**	Bolt, pivot	27-03
12	**392909**	Fitting, lubricating	27-03
13	**641916**	Washer, mounting pin	28-01
14	**53932**	Pin, cotter, mounting bracket	28-01
15	**A-572**	Plate and Shaft, left	27-03
	A-568	Plate and Shaft, right	27-03
16	**5938**	Lockwasher, clip to axle	27-03
17	**339372**	Nut, clip to axle	27-03
18	**637936**	Bushing, mounting pin	28-01
19	**645548**	Spring, front	27-01A
20	**648221**	Absorber, shock **(After Serial No. 199079)**	28-01
21	**635532**	Bushing, spring shackle, lower	27-03
22	**634432**	Bushing, spring shackle, upper	27-03
23	**A-544**	Bracket, spring shackle	26-01
24	**359039**	Bushing, eye	27-01A
25	**A-1252**	Retainer, grease seal	27-03
26	**A-515**	Seal grease	27-03
27	**A-513**	"U" Bolt, left	27-03
	A-514	"U" Bolt, right	27-03

Part No.	Description	Quan. Req'd. Per Assy.
	GROUP 27-01—FRONT SPRING (Continued)	
116460	CLIP, front spring leaf (large for six leaves)	4
116458	CLIP, front spring leaf (small for three leaves)	4
A-612-1	LEAF, front spring, No. 1 (36¼" between eye centers)	2
A-612-2	LEAF, front spring, No. 2 (36 in. long)	2
A-612-3	LEAF, front spring, No. 3 (30 in. long)	2
A-612-4	LEAF, front spring, No. 4 (26 in. long)	2
A-612-5	LEAF, front spring, No. 5 (23 in. long)	2
A-612-6	LEAF, front spring, No. 6 (18 in. long)	2
A-612-7	LEAF, front spring, No. 7 (14 in. long)	2
A-612-8	LEAF, front spring, No. 8 (10 in. long)	2
	GROUP 27-01A—FRONT SPRING, HEAVY DUTY	
A-8463	**Spring, Front, Assembly** (10 leaves) **(Use 645548)**	2
116711	BOLT and NUT, center, front spring, assembly	2
359039	BUSHING, front spring eye	4
A-8463-1	LEAF, front spring, No. 1 (36¼" between eye centers) **(Use A-612-1)**	2
A-8463-2	LEAF, front spring, No. 2 (36¼" between eye centers) **(Use A-612-2)**	2
A-8463-3	LEAF, front spring, No. 3 (32" long)	2
A-8463-4	LEAF, front spring, No. 4 (28 5/32" long)	2
A-8463-5	LEAF, front spring, No. 5 (25" long)	2
A-6463-6	LEAF, front spring, No. 6 (21 7/16" long)	2
A-8463-7	LEAF, front spring, No. 7 (19 1/32" long)	2
A-8463-8	LEAF, front spring, No. 8 (15" long)	2
A-8463-9	LEAF, front spring, No. 9 (11 17/32" long)	2
A-8463-10	LEAF, front spring, No. 10 (8 5/16" long)	2
645548	**Spring, Front, Assembly** (10 leaves) **(Heavy Duty) (After Serial No. 169923)**	2
645548-1	LEAF, front spring, No. 1 (36¼" between eye centers) **(Use A-612-1)**	2
645548-2	LEAF, front spring, No. 2 (36¼" between eye centers) **(Use A-612-2)**	2
645548-3	LEAF, front spring, No. 3 (32" long)	2
645548-4	LEAF, front spring, No. 4 (30" long)	2
645548-5	LEAF, front spring, No. 5 (26" long)	2
645548-6	LEAF, front spring, No. 6 (23" long)	2
645548-7	LEAF, front spring, No. 7 (20½" long)	2
645548-8	LEAF, front spring, No. 8 (18" long)	2
645548-9	LEAF, front spring, No. 9 (14" long)	2
645548-10	LEAF, front spring, No. 10 (10" long)	2
	GROUP 27-02—REAR SPRING	
A-614	**Spring, Rear, Assembly** (9 leaves)	2
116716	BOLT and NUT, center, rear spring, assembly	2
359039	BUSHING, rear spring	2
116589	CLIP, rear spring leaf (large for seven leaves)	4
116459	CLIP, rear spring leaf (small for three leaves)	4
A-614-1	LEAF, rear spring, No. 1 (42" between eye centers) **(Use 645864-1)**	2
A-614-2	LEAF, rear spring, No. 2 (42" between eye centers) **(Use 645864-2)**	2
A-614-3	LEAF, rear spring, No. 3 (36 in. long)	2
A-614-4	LEAF, rear spring, No. 4 (32 in. long)	2
A-614-5	LEAF, rear spring, No. 5 (28 in. long)	2
A-614-6	LEAF, rear spring, No. 6 (23 in. long)	2
A-614-7	LEAF, rear spring, No. 7 (19 in. long)	2
A-614-8	LEAF, rear spring, No. 8 (15 in. long)	2
A-614-9	LEAF, rear spring, No. 9 (11 in. long)	2
	GROUP 27-02A—REAR SPRING, HEAVY DUTY	
A-15728	**Spring, Rear, Assembly** (11 leaves) **(Use 645864)**	2
116716	BOLT and NUT, center, rear spring, assembly	2
359039	BUSHING, rear spring	2
A-15728-1	LEAF, rear spring, No. 1 (42" between eye centers) **(Use 645864-1)**	2
A-15728-2	LEAF, rear spring, No. 2 (42" between eye centers) **(Use 645864-2)**	2
A-15728-3	LEAF, rear spring, No. 3 (37⅝" long)	2
A-15728-4	LEAF, rear spring, No. 4 (33½" long)	2
A-15728-5	LEAF, rear spring, No. 5 (30 5/32" long)	2
A-15728-6	LEAF, rear spring, No. 6 (27 9/32" long)	2
A-15728-7	LEAF, rear spring, No. 7 (23 7/16" long)	2
A-15728-8	LEAF, rear spring, No. 8 (20" long)	2
A-15728-9	LEAF, rear spring, No. 9 (16 1/32" long)	2
A-15728-10	LEAF, rear spring, No. 10 (13 1/32" long)	2
A-15728-11	LEAF, rear spring, No. 11 (10" long)	2
645864	**Spring, Rear, Assembly** (11 leaves) **(Heavy Duty) (After Serial No. 169923)**	2
645864-1	LEAF, rear spring, No. 1 (42" between eye centers)	2
645864-2	LEAF, rear spring, No. 2 (42" between eye centers)	2
645864-3	LEAF, rear spring, No. 3 (39" long)	2
645864-4	LEAF, rear spring, No. 4 (36" long)	2
645864-5	LEAF, rear spring, No. 5 (32" long)	2
645864-6	LEAF, rear spring, No. 6 (30" long)	2
645864-7	LEAF, rear spring, No. 7 (28" long)	2

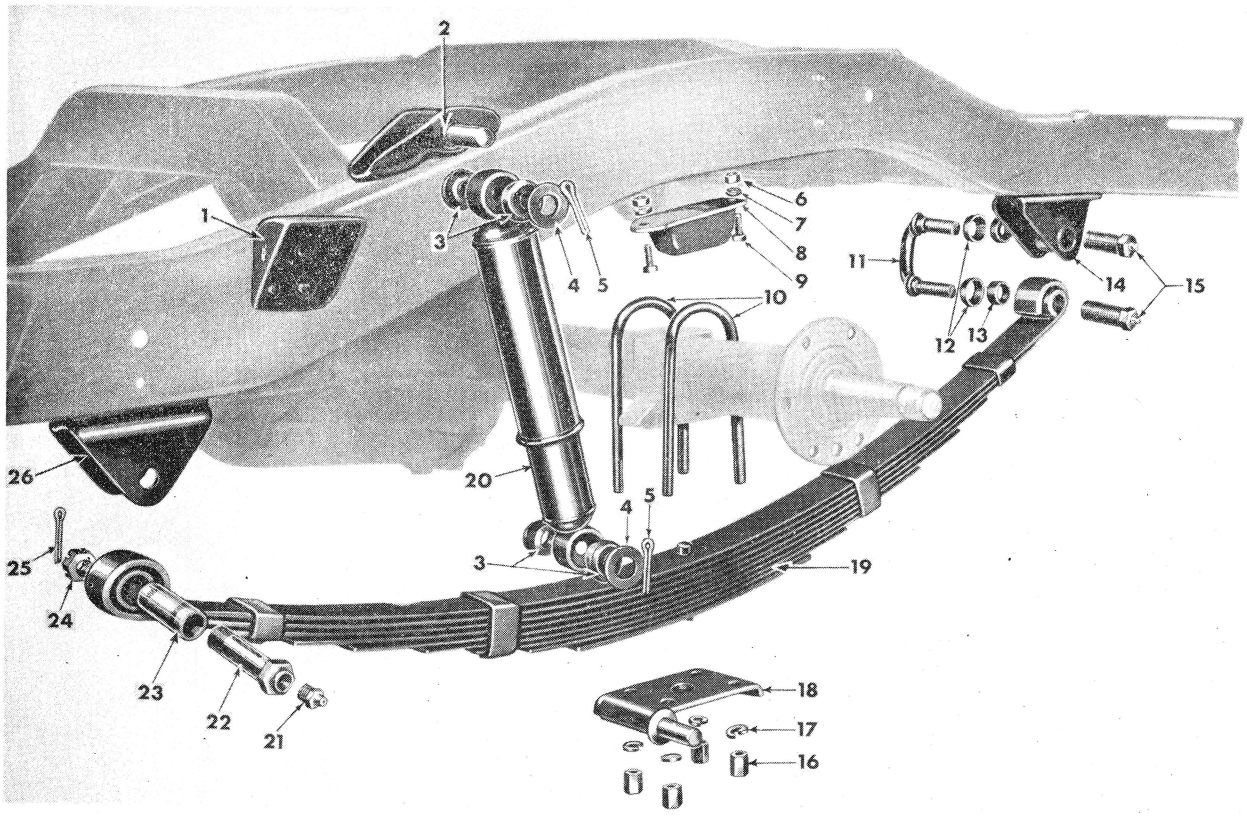

FIG No. 54—REAR SPRING AND SHOCK ABSORBER

Ref. No.	Part No.	Description	Group No.
1	**645072**	Outrigger, left and right	26-01
2	**647350**	Bracket and shaft	26-01
3	**637936**	Bushing, mounting pin	28-01
4	**641916**	Washer, mounting pin	28-01
5	**53932**	Pin, cotter, mounting bracket	28-01
6	**5910**	Nut, bumper to frame	26-01
7	**51833**	Lockwasher, bumper to frame	26-01
8	**A-481**	Bumper, axle	26-01
9	**51396**	Bolt, bumper to frame	26-01
10	**640933**	Clip, rear spring	27-03
11	**A-514**	Bolt, "U", spring shackle	27-03
12	**A-1252**	Retainer, grease seal	27-03
13	**A-515**	Seal, grease	27-03
14	**A-544**	Bracket, spring shackle	27-03
15	**634432**	Bushing, spring shackle	27-03
16	**339372**	Nut, clip to axle	27-03
17	**5938**	Lockwasher, clip to axle	27-03
18	**640932**	Plate and Shaft, left	27-03
	640938	Plate and Shaft, right	27-03
19	**A-614**	Spring, rear	27-03
20	**648202**	Absorber, shock, rear	28-01
21	**392909**	Fitting, lubricating	27-03
22	**384228**	Bolt, pivot	27-03
23	**359039**	Bushing, eye	27-02
24	**53733**	Nut, pivot bolt	27-03
25	**5021**	Pin, cotter, pivot bolt	27-03
26	**A-500**	Bracket, pivot	26-01

Part No.	Description	Quan. Req'd. Per Assy.
	GROUP 27-02A—REAR SPRING, HEAVY DUTY (Continued)	
645864-8	LEAF, rear spring, No. 8 (23" long)	2
645864-9	LEAF, rear spring, No. 9 (19" long)	2
645864-10	LEAF, rear spring, No. 10 (15" long)	2
645864-11	LEAF, rear spring, No. 11 (11" long)	2
	GROUP 27-03—SPRING AND SHOCK ABSORBER ATTACHING PARTS	
384228	BOLT, pivot, spring (For front of rear spring and rear of front spring)	4
53733	NUT, hex., 9/16"-18	4
5021	PIN, cotter, 3/32" x 1"	4
A-513	BOLT, "U", spring shackle, left hand thread (1 used front end of left front spring, 1 used rear end of right rear spring)	2
A-514	BOLT, "U", spring shackle, right hand thread (1 used front end of right front spring, 1 used rear end of left rear spring)	2
A-544	BRACKET, front and rear spring shackle, assembly	4
A-500	BRACKET, pivot, front and rear spring	4
5215	RIVET, rd. hd., 3/8" x 3/4" (Bracket to frame)	16
635532	BUSHING, spring shackle, assembly, left hand thread (Front end left front spring lower, rear end right rear spring lower)	2
634432	BUSHING, spring shackle, assembly, right hand thread (All springs upper, front end right front spring lower, rear end left rear spring lower)	6
A-1097	CLIP, front spring (2 used left front spring to axle tube, 1 used right front spring to axle tube)	3
A-8291	CLIP, front spring (Heavy Duty Springs) (Left and right side over axle tube) **(Use A-575)**	3
A-575	CLIP, front spring	3

Part No.	Description	Quan. Req'd. Per Assy.
	GROUP 27-03—SPRING AND SHOCK ABSORBER ATTACHING PARTS (Continued)	
A-8289	CLIP, front spring (Heavy Duty Springs) (Right side over axle housing)	1
A-574	CLIP, front spring to axle tube	4
A-575	CLIP, rear spring **(Up to Serial No. 13453)**	4
640933	CLIP, rear spring **(After Serial No. 13453)**	4
642987	CLIP, rear spring (Heavy Duty Springs) (Spring to axle) (Semi-floating rear axle)	4
339372	NUT, hex., 7/16"-20 } Spring clip to axle	16
5938	LOCKWASHER, 7/16" } Spring clip to axle	16
640038	FITTING, lubricating (1/8" pipe) **(Up to Serial No. 11825)**	4
392909	FITTING, lubricating (straight, 1/8" pipe thread) **(After Serial No. 11825)** (Int'ch'ble with 646906)	4
646906	FITTING, lubricating (Int'ch'ble with 392909)	4
638792	FITTING, lubricating (straight, 1/4"-28 thread)	8
A-572	PLATE and SHAFT, spring clip and shock absorber, assembly (Left front **All Trucks**, right rear **Up to Serial No. 13453)**	1
A-568	PLATE and SHAFT, spring clip and shock absorber, assembly (Right front **All Trucks)**	1
A-571	PLATE and SHAFT, spring clip and shock absorber, assembly (Left rear **Up to Serial No. 13453)**	1
640932	PLATE and SHAFT, spring clip and shock absorber, assembly (Left rear **After Serial No. 13453)**	1
640938	PLATE and SHAFT, spring clip and shock absorber, assembly (Right rear **After Serial No. 13453)**	1
A-1252	RETAINER, spring shackle grease seal	8
A-515	SEAL, grease, spring shackle	8
635629	WASHER, special, spring clip plate and shaft	2
	GROUP 27-04—SPRING BUMPERS	
A-481	**Bumper, Axle, Front and Rear Spring**	4
51396	BOLT, hex. hd., 5/16"-24 x 3/4" } Axle bumper to frame	4
51308	BOLT, hex. hd., 5/16"-24 x 2" } Axle bumper to frame	4
51833	LOCKWASHER, 5/16" } Axle bumper to frame	8
646671	SPACER, front axle bumper (To provide clearance when Monroe Lif Pump is used) **(After Serial No. 178936, Up to Serial No. 215649)**	2
640207	SPACER, rear axle bumper to frame **(Up to Serial No. 106805)**	2

GROUP 28—SHOCK ABSORBERS

GROUP 28-01—SHOCK ABSORBERS

642229	**Absorber, Shock, Front, Assembly (Use 645795)**	2
645795	**Absorber, Shock, Front, Assembly** (Monroe) **(Up to Serial No. 178936)**	2
646658	**Absorber, Shock, Front, Assembly** (Monroe) **(After Serial No. 178936)**	2
647500	**Absorber, Shock, Front, Assembly** (Monroe) **(After Serial No. 178936, Up to Serial No. 199079)** (Int'ch'ble with 646240)	2
646240	**Absorber, Shock, Front, Assembly** (Gabriel) **(After Serial No. 178936, Up to Serial No. 199079)** (Int ch'ble with 647500)	2
648221	**Absorber, Shock, Front, Assembly** (Monroe) **(After Serial No. 199079)**	2
648222	**Absorber, Shock, Front, Assembly** (Gabriel) **(After Serial No. 199079)**	2
642230	**Absorber, Shock, Rear, Assembly (Use 645796)**	2
645796	**Absorber, Shock, Rear, Assembly** (Monroe) **(Up to Serial No. 178936)**	2
647501	**Absorber, Shock, Rear, Assembly** (Monroe) **(After Serial No. 178936, Up to Serial No. 199079)** (Int'ch'ble with 646241)	2
646241	**Absorber, Shock, Rear, Assembly** (Gabriel) **(After Serial No. 178936, Up to Serial No. 215649)** (Int'ch'ble with 647501)	2
648202	**Absorber, Shock, Rear, Assembly** (Monroe) **(After Serial No. 199079, Up to Serial No. 215649)** (Int'ch'ble with 646849)	2
646849	**Absorber, Shock, Rear, Assembly** (Monroe) **(After Serial No. 215649)** (Int'ch'ble with 648202 in pairs)	2
648201	**Absorber, Shock, Rear, Assembly** (Gabriel) **(After Serial No. 215649)**	2
A-1204	BRACKET and SHAFT, left front shock absorber, frame end } **For Lower Brackets see Plate and Shaft Group 27-03**	1
A-1205	BRACKET and SHAFT, right front shock absorber, frame end } **For Lower Brackets see Plate and Shaft Group 27-03**	1
640209	BRACKET and SHAFT, left rear shock absorber, frame end } **For Lower Brackets see Plate and Shaft Group 27-03**	1
640210	BRACKET and SHAFT, right rear shock absorber, frame end } **For Lower Brackets see Plate and Shaft Group 27-03**	1
637936	BUSHING, shock absorber mounting pin	16
A-10455	FLUID, shock absorber	As req'd.
53932	PIN, shock absorber to bracket (cotter, 3/16" x 1")	8
A-271	SPACER, shock absorber	4
641916	WASHER, shock absorber mounting pin (Special, 1 1/4" O.D. x 41/64" I.D. x 5/32" thick)	8

GROUP 29—FENDERS

GROUP 29-01—FRONT FENDERS

663150	**Fender, Front, Left, Assembly**	1
663151	**Fender, Front, Right, Assembly (CJ-2A) (Use 670490)**	1
670490	**Fender, Front, Right, Assembly (CJ-3A)**	1
52543	BOLT, hex. hd., 3/8"-24 x 3/4" } Left front fender to frame	2
52819	WASHER, plain, 3/8" } Left front fender to frame	2
52046	LOCKWASHER, 3/8" } Left front fender to frame	2
53928	BOLT, hex. hd., 5/16"-18 x 3/4" **(Up to Serial No. 215649)** } Front fender to cowl	6
53933	BOLT, hex. hd., 5/16"-18 x 7/8" } Front fender to cowl	2
52850	NUT, hex., 5/16"-18 } Front fender to cowl	2
A-11775	WASHER, plain, 5/16" **(Up to Serial No. 215649)** } Front fender to cowl	8
53047	LOCKWASHER, 5/16" **(Up to Serial No. 215649)** } Front fender to cowl	8

Part No.	Description	Quan. Req'd. Per Assy.
	GROUP 29-01—FRONT FENDERS (Continued)	
A-3159	ANTI-SQUEAK, front fender splash apron to frame (Frame side, left and right) **(Up to Serial No. 215649)**	2
A-2662	ANTI-SQUEAK, front fender to cowl side panel, lower	2
A-3158	ANTI-SQUEAK, front fender to cowl side panel, upper	2
A-3179	BOLT, welding, 5/16"-18 x 5/8" (Battery to front fender strap bolt reinforcement to front fender)	1
A-2843	BRACE, front fender, left	1
A-2844	BRACE, front fender, right	1
53065	BOLT, hex. hd., 3/8"-24 x 1 3/8" (Front fender brace to frame)	4
52819	WASHER, plain, 3/8" (Front fender brace to frame)	4
52046	LOCKWASHER, 3/8" (Front fender brace to frame)	4
	GROUP 29-01A—BODY STEP (After Serial No. 129806—CJ-2A and All CJ-3A)	
656313	**Step, Left, Assembly**	1
656314	**Step, Right, Assembly**	1
53898	BOLT, hex. hd., 5/16"-24 x 7/8" (Step to body sides)	2
52626	NUT, hex., 5/16"-24 (Step to body sides)	2
53821	WASHER, flat, 5/16" (Step to body sides)	2
53047	LOCKWASHER, 5/16" (Step to body sides)	2
52721	BOLT, hex. hd., 5/16"-24 x 5/8" (Step to floor pan)	4
52626	NUT, hex., 5/16"-24 (Step to floor pan)	6
671995	NUT, speed, 5/16" (Step to floor pan)	2
53735	WASHER, flat, 5/16" (Step to floor pan)	4
53047	LOCKWASHER, 5/16" (Step to floor pan)	6
52721	BOLT, hex. hd., 5/16"-24 x 5/8" (Step to frame)	3
52626	NUT, hex., 5/16"-24 (Step to frame)	3
53047	LOCKWASHER, 5/16" (Step to frame)	3
53068	BOLT, hex. hd., 5/16"-24 x 3/4" (Step to stringer)	6
53735	WASHER, flat, 5/16" (Step to stringer)	6
53047	LOCKWASHER, 5/16" (Step to stringer)	6
A-12085	NUT, weld, 5/16"-24 **(Up to Serial No. 133106—CJ-2A)**	6
668347	NUT, clinch, 5/16"-24 **(After Serial No. 133106—CJ-2A and All CJ-3A)**	6
668639	PLATE, stud, assembly (Includes welding bolt A-3150)	2
668481	SPACER, step to front floor pan	2
666719	SUPPORT, step	2

GROUP 30—HOOD

GROUP 30-01—HOOD—Models CJ-2A and CJ-3A

663084	**Hood Assembly (CJ-2A) (Use 670969)**	1
670969	**Hood Assembly (CJ-3A)**	1
663640	BRACKET, hood catch	2
53929	BOLT, hex. hd., 1/4"-20 x 5/8" (Hood catch bracket to hood)	4
52669	NUT, hex., 1/4"-20 (Hood catch bracket to hood)	4
52668	WASHER, flat, 1/4" (Hood catch bracket to hood)	4
53058	LOCKWASHER, 1/4" (Hood catch bracket to hood)	4
663743	BUMPER, hood top windshield (CJ-2A)	2
670990	BUMPER, hood top windshield (CJ-3A)	2
53889	SCREW, rd. hd., No. 10-24 x 1 1/4" (Hood bumper to hood)	4
52651	NUT, hex., No. 10-24 (Hood bumper to hood)	4
A-1702	WASHER, flat, No. 10 (Hood bumper to hood)	4
52221	LOCKWASHER, No. 10 (Hood bumper to hood)	4
663548	CATCH, hood, assembly	2
53929	BOLT, hex. hd., 1/4"-20 x 5/8" (Hood catch to front fender)	4
52669	NUT, hex., 1/4"-20 (Hood catch to front fender)	4
52668	WASHER, plain, 1/4" (Hood catch to front fender)	4
53058	LOCKWASHER, 1/4" (Hood catch to front fender)	4
A-12101	HINGE, hood, assembly (CJ-2A)	1
670948	HINGE, hood, assembly (CJ-3A)	1
53929	BOLT, hex. hd., 1/4"-20 x 5/8" (Hood hinge to cowl)	5
53843	WASHER, flat, 1/4" (Hood hinge to cowl)	5
53058	LOCKWASHER, 1/4" (Hood hinge to cowl)	5
A-12102	PIN, hood hinge (CJ-2A)	1
670951	PIN, hood hinge (CJ-3A)	1
670345	TROUGH, drain, hood hinge **(After Serial No. 193800—CJ-2A and All CJ-3A)**	1

GROUP 31—BODY

GROUP 31-01—BODY ASSEMBLY

Model CJ-2A

663661	BODY Complete Assembly **(Up to Serial No. 38221)**	1
664948	BODY Complete Assembly (For cane type shift control) **(After Serial No. 38221)**	1
663591	BODY Assembly **(Up to Serial No. 38221)**	1
663796	BODY Assembly (For cane type shift control) **(After Serial No. 38221)**	1
669447	BODY Assembly (Painted) (For cane type shift control and spare tire mounted on left side) **(After Serial No. 176061, Up to Serial No. 185769)**	1

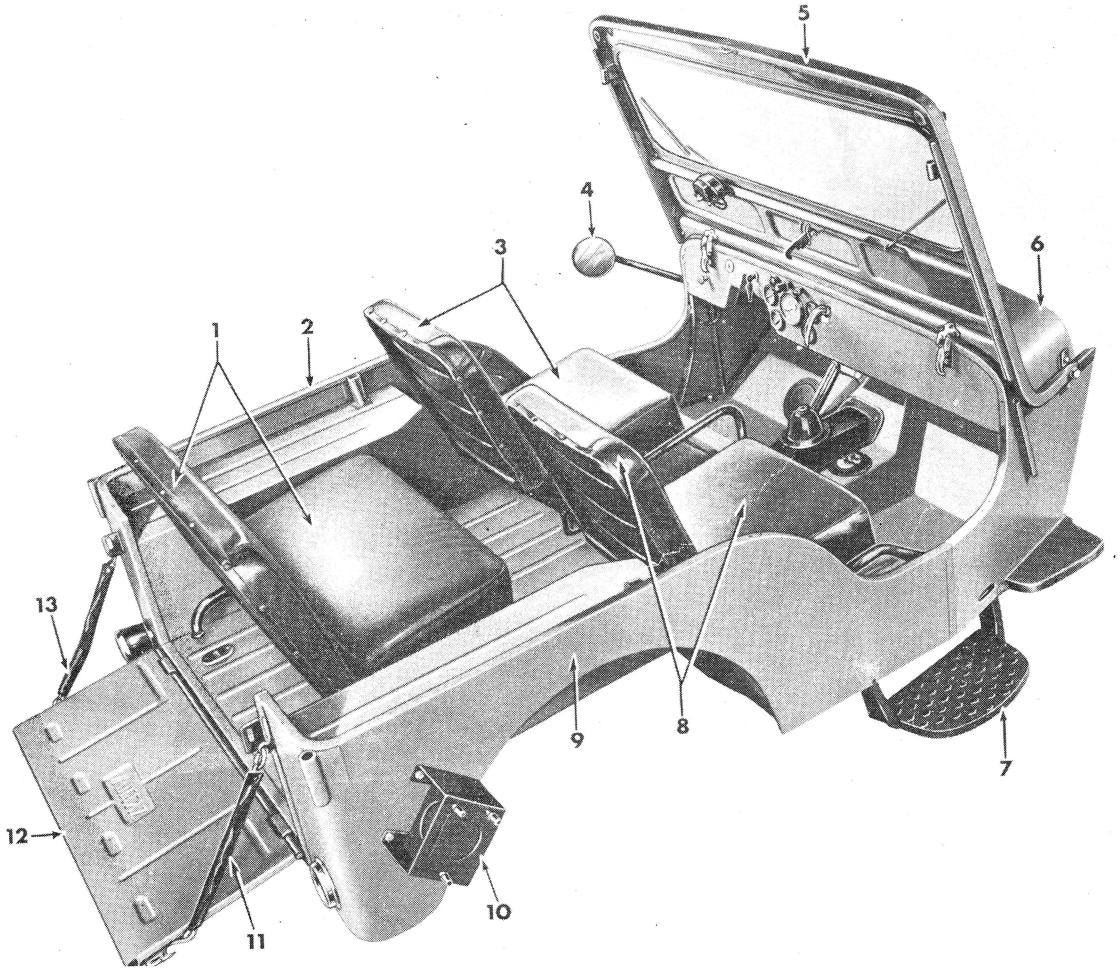

FIG. No. 55—BODY, REAR QUARTER VIEW (CJ-3A)

Ref. No.	Part No.	Description	Group No.
1	**670561**	Seat, rear passenger	35-09A
2	**671065**	Panel, side, left	31-07
3	**671373**	Seat, driver's	31-09
4	**666767**	Mirror, rear view	31-15
5	**671031**	Windshield	31-11
6	**671057**	Panel, cowl	31-06
7	**656313**	Step, left	29-01A
	656314	Step, right	29-01A
8	**670427**	Seat, front passenger	35-19A
9	**671066**	Panel, side right	31-07
10	**663421**	Bracket, spare wheel	31-09A
11	**651590**	Chain, tail gate, right	31-08
12	**663188**	Gate, tail	31-08
13	**651589**	Chain, tail gate, left	31-08

Part No.	Description	Quan. Req'd. Per Assy.
	GROUP 31-01—BODY ASSEMBLY (Continued)	
663217	BODY, front, sub-assembly (Cowl Complete)	1
663219	BODY, rear, assembly (Includes rear center panel, rear left panel, rear right panel, reinforcements and strainers)	1
	Model CJ-3A	
671162	BODY Complete Assembly	1
671064	BODY Assembly (Painted)	1
671054	BODY Assembly (Prime Paint Coat)	1
671055	BODY, front, sub-assembly (Cowl Complete)	1
671062	BODY, rear, sub-assembly	1
	Body Complete includes body assembly plus fuel tank, wiring, instruments, choke and throttle controls, driver's seat, starter switch, tail light, accelerator treadle and speedometer cable.	
	Body Assembly includes all welded parts.	
	GROUP 31-02—BODY HOLD DOWN	
A-4413	LINER, body sill, 3/16" thick	2
54132	BOLT, hex. hd., 3/8"-24 x 1" (No. 1 body hold down)	2
52819	WASHER, flat, 3/8" (No. 1 body hold down)	2
52046	LOCKWASHER, 3/8" (No. 1 body hold down)	2
A-4414	LINER, body sill, 1/8" thick	2

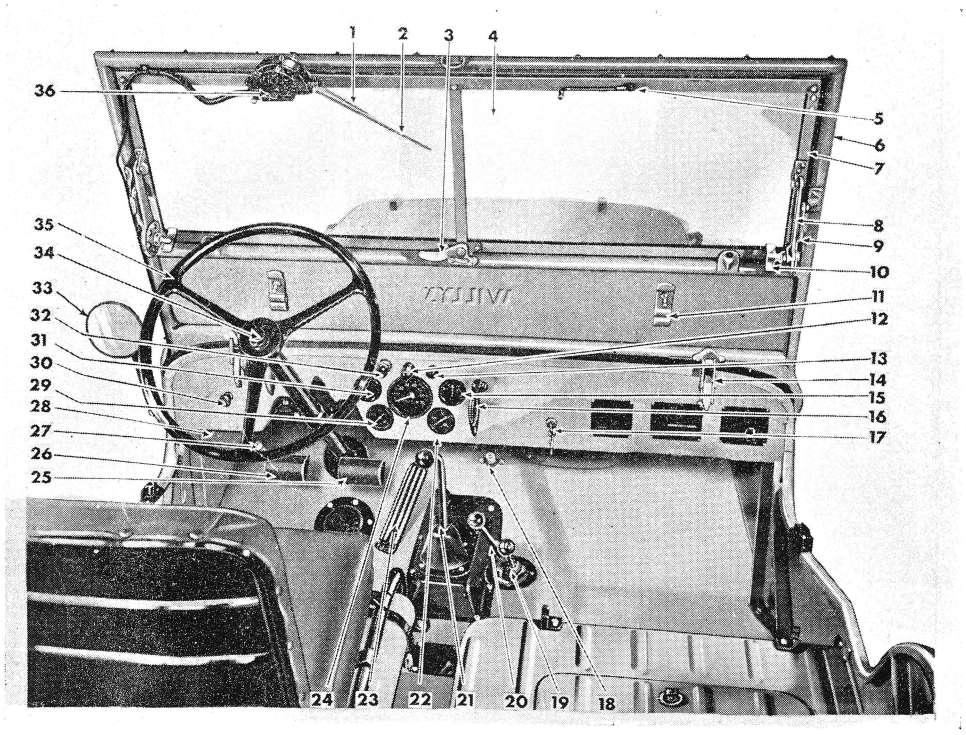

FIG. No. 56—FRONT COMPARTMENT (CJ-2A)

Ref. No.	Part No.	Description	Group No.	Ref. No.	Part No.	Description	Group No.
1	**663368**	Arm, windshield wiper	31-14	19	**A-1505**	Lever, shift, underdrive	18-06
2	**663367**	Blade, windshield wiper	31-14	20	**648589**	Lever, shift, front drive	18-06
3	**664793**	Lock, center, windshield	31-11	21	**643916**	Lever, gearshift	17-06B
4	**A-2478**	Glass, windshield	31-11	22	**640762**	Gauge, heat indicator	16-02
5	**663647**	Handle and Knob	31-13A	23	**640721**	Pedal, accelerator	12-08
6	**663628**	Frame, tubular, windshield	31-11	24	**640131**	Speedometer	16-04
7	**663630**	Frame and Glass, windshield	31-11	25	**647636**	Pedal, brake	24-08
8	**663707**	Arm, windshield, inner	31-11	26	**A-405**	Pedal, clutch	11-02
9	**663712**	Arm, windshield, outer	31-11	27	**640260**	Switch, dimmer	15-12
10	**663705**	Screw, wing, adjusting	31-11	28	**635737**	Switch, instrument light	15-12B
11	**663198**	Retainer, bow storage	31-11	29	**640764**	Gauge, oil	16-03A
12	**645177**	Light, instrument panel	15-11	30	**641622**	Switch, lighting	15-12A
13	**640765**	Control, choke	12-06	31	**640763**	Gauge, fuel	16-03
14	**663677**	Clamp, windshield	31-11	32	**640669**	Control, throttle	12-07
15	**640761**	Ammeter	16-01	33	**663165**	Mirror, rear vision	31-15
16	**643123**	Handle, hand brake	24-01	34	**A-634**	Button, horn	15-17A
17	**642073**	Switch, ignition	15-05	35	**641970**	Wheel, steering	23-04
18	**A-7225**	Switch, starter	15-13	36	**663636**	Motor, windshield wiper	31-13

Part No.	Description		Quan. Req'd. Per Assy.
	GROUP 31-02—BODY HOLD DOWN (Continued)		
53958	BOLT, hex. hd., 3/8"-24 x 1 3/4"	No. 2 body hold down	2
GM-442828	NUT, lock, 3/8"-24	No. 2 body hold down	2
52819	WASHER, flat, 3/8"	No. 2 body hold down	4
670540	LINER, body sill, 1/4" thick		1
54132	BOLT, hex. hd., 3/8"-24 x 1"	No. 3 body hold down, left side only	1
52819	WASHER, flat, 3/8"	No. 3 body hold down, left side only	1
52046	LOCKWASHER, 3/8"	No. 3 body hold down, left side only	1
670540	LINER, body sill, 1/4" thick		1
53958	BOLT, hex. hd., 3/8"-24 x 1 3/4"	No. 3 body hold down, right side only	1
GM-442828	NUT, lock, 3/8"-24	No. 3 body hold down, right side only	1
52819	WASHER, flat, 3/8"	No. 3 body hold down, right side only	2
A-4414	LINER, body sill, 1/8" thick		2
54132	BOLT, hex. hd., 3/8"-24 x 1"	No. 4 body hold down	2
GM-442828	NUT, lock, 3/8"-24	No. 4 body hold down	2
52819	WASHER, flat, 3/8"	No. 4 body hold down	4
A-4414	LINER, body sill, 1/8" thick		2
53919	BOLT, step, 5/16"-18 x 1 1/2"	No. 5 body hold down	2
GM-442825	NUT, lock, 5/16"-18	No. 5 body hold down	2
53735	WASHER, flat, 5/16"	No. 5 body hold down	2
A-4414	LINER, body sill, 1/8" thick		2

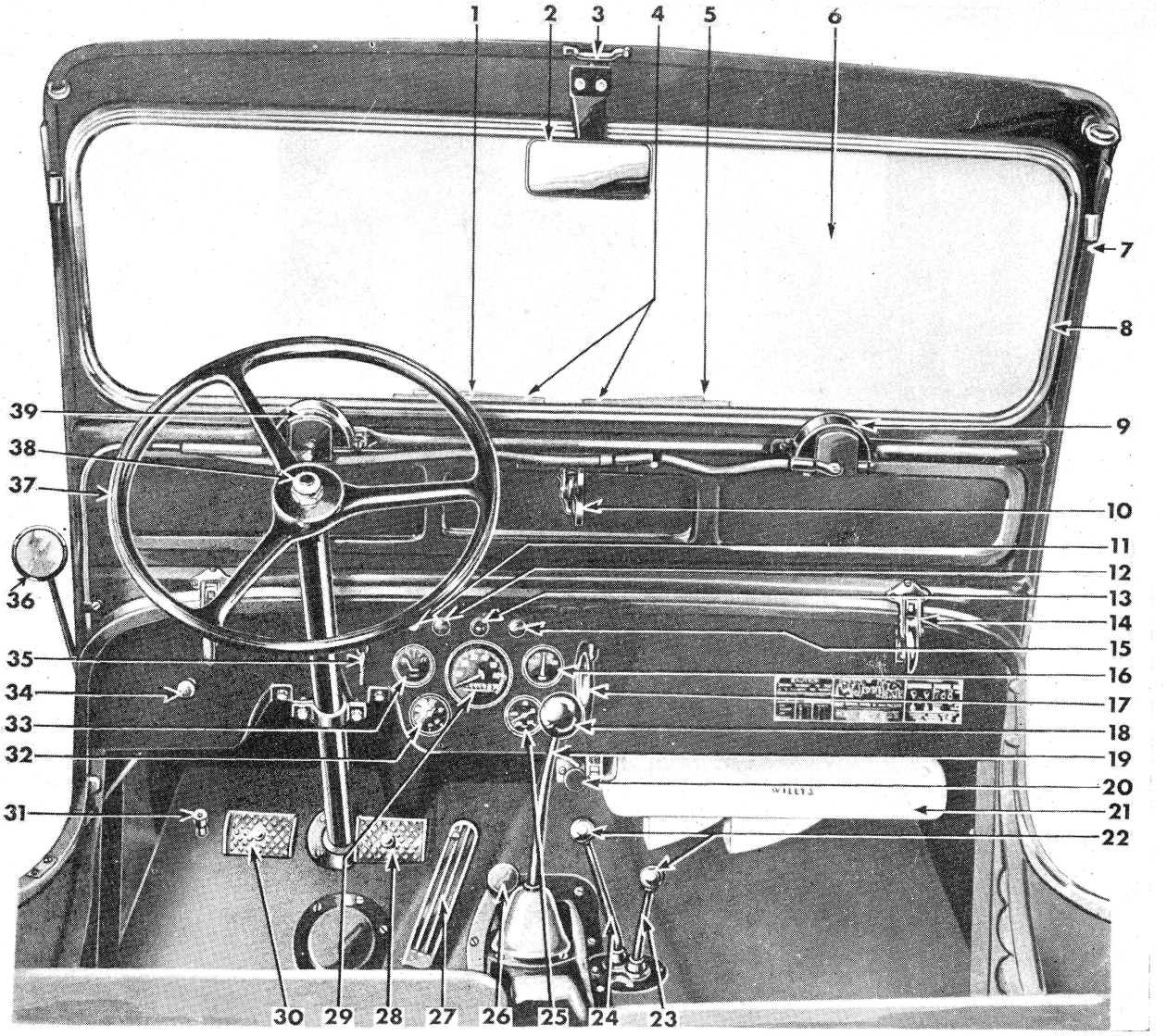

FIG. No. 57—FRONT COMPARTMENT (CJ-3A)

Ref No.	Part No.	Description	Group No.
1	**671137**	Arm, windshield wiper	31-14
2	**671147**	Mirror, rear view, inside	35-32
3	**670953**	Loop, top bow spacer	31-11
4	**671041**	Blade, windshield wiper	31-14
5	**671138**	Arm, windshield wiper, right	35-34
6	**670911**	Glass, windshield	31-11
7	**671031**	Windshield	31-11
8	**670923**	Weatherstrip, windshield glass	31-11
9	**663636**	Motor, windshield wiper, right	35-34
10	**671387**	Handle, ventilator lid	31-11
11	**642982**	Bezel and lens, tell-tale	15-11A
12	**640669**	Control, throttle	12-07
13	**645177**	Light, instrument panel	15-11
14	**663677**	Clamp, windshield	31-11
15	**640765**	Control, choke	12-06
16	**640761**	Ammeter	16-01
17	**643123**	Handle, hand brake	24-01
18	**644233**	Ball, gearshift lever	17-06B
19	**648593**	Lever, gearshift	17-06B
20	**647941**	Rod, starter	15-13A
21	**669313**	Heater	35-18
22	**A-971**	Ball, control lever	17-06B
23	**A-1505**	Lever, underdrive	18-06
24	**648589**	Lever, shift, front drive	18-06
25	**647886**	Gauge, heat indicator	16-02
26	**641922**	Rest, accelerator foot	12-08
27	**640721**	Pedal, accelerator	12-08
28	**647636**	Pedal, brake	24-08
29	**640131**	Speedometer	16-04
30	**A-405**	Pedal, clutch	11-02
31	**640260**	Switch, dimmer	15-12
32	**647890**	Gauge, oil	16-03A
33	**640763**	Gauge, fuel	16-03
34	**641622**	Switch, lighting	15-12A
35	**643711**	Switch, ignition	15-05A
36	**666767**	Mirror, rear view, outside	31-15
37	**641970**	Wheel, steering	23-04
38	**A-634**	Button, horn	15-17A
39	**671921**	Motor, windshield wiper	31-13

Part No.	Description	Quan. Req'd. Per Assy.
	GROUP 31-02—BODY HOLD DOWN (Continued)	
53931	BOLT, hex. hd., 5/16"-18 x 7/8" } No. 6 body hold down, inner	2
GM-442825	NUT, lock, 5/16"-18 } No. 6 body hold down, inner	2
53735	WASHER, flat, 5/16" } No. 6 body hold down, inner	4
A-4414	LINER, body sill, 1/8" thick	2
53931	BOLT, hex. hd., 5/16"-18 x 7/8" } No. 6 body hold down, outer	2
GM-442825	NUT, lock, 5/16"-18 } No. 6 body hold down, outer	2
53735	WASHER, flat, 5/16" } No. 6 body hold down, outer	4
	GROUP 31-03—FRONT FLOOR PAN	
	Model CJ-2A	
663139	**Pan, Front Floor, Assembly (Up to Serial No. 38221) (Use 667746)**	1
667746	**Pan and Floor Plates, Front Floor, Assembly (Up to Serial No. 38221)**	1
663783	**Pan, Front Floor, Assembly (After Serial No. 38221)**	1
A-2263	NUT, clinch, 3/8"-16	1
A-2278	NUT, clinch, 1/4"-20	13
A-2375	NUT, clinch, 5/16"-24	3
A-3550	NUT, square, 5/16"-18	2
A-12462	NUT, welding, sq., 5/16"-18	1
A-12085	NUT, welding, 5/16"-24 (For vehicles with body steps) **(Up to Serial No. .....)**	2
663218	PANEL, front floor and dash, assembly	1
A-3549	RETAINER, nut, 5/16"	2
	Model CJ-3A	
671019	**Pan, Front Floor, Assembly**	1
671056	**Pan, Front Floor and Dash Panel, Assembly**	1
GM-428445	BOLT, hex. hd., 3/8"-16 x 1 3/4" } Front floor front strainer to floor pan	2
53908	NUT, hex., 3/8"-16 } Front floor front strainer to floor pan	2
53922	NUT, stamped, 3/8"-16 } Front floor front strainer to floor pan	2
52819	WASHER, plain, 3/8" } Front floor front strainer to floor pan	4
663374	FILLER, extension, front floor pan diagonal sill	2
50913	SCREW, rd. hd., No. 10-13 x 1/2", wood (Filler to front floor diagonal sill extension)	2
A-2278	NUT, clinch, 1/4"-20	7
A-2375	NUT, clinch, 5/16"-24	1
A-11030	NUT, clinch, 3/8"-24	1
A-3550	NUT, square, 5/16"-18	2
671564	PLUG, drain, front floor pan	1
A-3549	RETAINER, nut, 5/16"	2
	GROUP 31-04—REAR FLOOR PAN	
	Model CJ-2A	
663265	**Pan, Rear Floor, Assembly**	1
663419	EXTENSION, (tool box) floor, assembly	1
663223	PANEL, wheelhouse, left, assembly	1
663224	PANEL, wheelhouse, right, assembly	1
663109	RISER, front floor to rear floor	1
	Model CJ-3A	
670381	**Pan, Rear Foor, Assembly (Welding)**	1
670915	EXTENSION, floor, assembly (This is section of floor to which tool box lid is assembled)	1
663068	FILLER, rear floor pan cross sill (wood)	1
663559	LOOP, footman (Int'ch'ble with 663808)	3
663808	LOOP, footman (Int'ch'ble with 663559)	3
51537	SCREW, fl. hd., No. 10-24 x 1/2" } Footman loop to rear floor	6
53386	NUT, hex., No. 10-24 } Footman loop to rear floor	6
52221	LOCKWASHER, No. 10 } Footman loop to rear floor	6
A-3549	RETAINER, nut, 5/16"	2
670926	RING and RING RETAINER, tool box lid	1
53564	RIVET, rd. hd., 1/8" x 5/16" **(Use 5659)**	2
5659	RIVET, rd. hd., 1/8" x 3/8" (Ring retainer assembly to floor extension)	2
670379	RISER, front to rear floor, assembly	1
A-3550	NUT, square, 5/16"-18 (For riser front to rear assembly)	2
	GROUP 31-05—DASH PANEL	
	Model CJ-2A	
663235	**Panel, Dash, Assembly**	1
A-2361	BRACE, instrument panel to dash	1
5247	RIVET, rd. hd., 1/4" x 3/8" (Brace to dash panel)	2
A-3538	NUT, clinch, No. 10-24	3
A-2375	NUT, clinch, 5/16"-24	6
5248	RIVET, rd. hd., 1/4" x 1/2" (Gussett to diagonal cross sill)	2
	Model CJ-3A	
671256	**Panel, Dash, Assembly**	1
A-3538	NUT, clinch, No. 10-24	3
A-2375	NUT, clinch, 5/16"-24	6

Part No.	Description	Quan. Req'd. Per Assy.

GROUP 31-06—COWL AND INSTRUMENT PANELS

Model CJ-2A

662010	NUT, clinch, 5/16"-18 (Side panel to dash reinforcement)	4
A-3550	NUT, square, 5/16"-18 (Cowl side panel)	2
663495	PANEL, instrument, assembly	1
663137	PANEL, side, cowl, left, assembly **(Use 664753)**	1
664753	PANEL, side, cowl, left, assembly	1
663138	PANEL, side, cowl, right, assembly **(Use 664754)**	1
664754	PANEL, side, cowl, right, assembly	1
663494	PANEL, top, cowl, assembly	1
A-2190	PLATE, tapping, hood hinge	1
A-3549	RETAINER, for 5/16"-18 square nut	2

Model CJ-3A

671055	BODY, front, sub-assembly (Cowl Complete)	1
662010	NUT, clinch, 5/16"-18 (For cowl side panels)	4
A-3550	NUT, square, 5/16"-18 (In cowl panel)	2
671057	PANEL, cowl, assembly (Includes top, side and instrument panels)	1
663495	PANEL, instrument, assembly	1
5247	RIVET, rd. hd., 1/4" x 3/8" (Instrument panel bracket to dash)	2
671059	PANEL, side, cowl, left, assembly	1
671060	PANEL, side, cowl, right, assembly	1
671061	PANEL, top, cowl, assembly	1
A-2190	PLATE, tapping, hood hinge	1
A-3549	RETAINER, for 5/16"-18 square nut	2

GROUP 31-07—SIDE AND REAR PANELS

Model CJ-2A

663107	BRACKET, storage, front top bow } Tire carrier on right side {	1
663685	BRACKET, storage, rear top bow } Tire carrier on right side {	1
668532	BRACKET, storage, front top bow, right } Tire carrier on left side {	1
668533	BRACKET, storage, rear top bow, right } **(After Serial No. 176061, Up to Serial No. 185769)** {	1
663089	BRACKET, top bow, front, left, assembly	1
663090	BRACKET, top bow, front, right, assembly	1
663679	BRACKET, top bow, rear, left, assembly	1
663680	BRACKET, top bow, rear, right, assembly	1
663559	LOOP, footman (Int'ch'ble with 663808)	13
663808	LOOP, footman (Int'ch'ble with 663559)	13
53916	SCREW, fl. hd., No. 10-24 x 3/8"	18
50814	SCREW, fl. hd., No. 10-24 x 1/2"	8
53386	NUT, hex., No. 10-24	26
52221	LOCKWASHER, No. 10	26
663123	PANEL, body rear, center, assembly	1
663121	PANEL, body rear, left, assembly	1
663122	PANEL, body rear, right, assembly	1
663221	PANEL, body side, left, assembly } Tire carrier on right side {	1
663222	PANEL, body side, right, assembly } Tire carrier on right side {	1
669450	PANEL, body side, left, assembly } Tire carrier on left side {	1
669454	PANEL, body side, right, assembly } **(After Serial No. 176061, Up to Serial No. 185769)** {	1
663223	PANEL, wheelhouse, left, assembly } Tire carrier on right side {	1
663224	PANEL, wheelhouse, right, assembly } Tire carrier on right side {	1
669451	PANEL, wheelhouse, left, assembly } Tire carrier on left side {	1
669455	PANEL, wheelhouse, right, assembly } **(After Serial No. 176061, Up to Serial No. 185769)** {	1
663507	RISER, front floor to rear floor	1
A-3051	SOCKET, fastener, side curtains to body	4

Model CJ-3A

671062	BODY, rear, sub-assembly	1
663396	BRACKET, spare wheel carrier, assembly (as welded on body)	1
663089	BRACKET, top bow, front, left, assembly	1
663090	BRACKET, top bow, front, right, assembly	1
663679	BRACKET, top bow, rear, left, assembly	1
663680	BRACKET, top bow, rear, right, assembly	1
663415	PANEL, body rear, center, assembly	1
663412	PANEL, body rear, left, assembly	1
663413	PANEL, body rear, right, assembly	1
671071	PANEL, body side, left, assembly	1
671072	PANEL, body side, right, assembly	1
671065	PANEL, body side, wheelhouse, left, sub-assembly	1
671066	PANEL, body side, wheelhouse, right, sub-assembly	1
671069	PANEL, body side and rear, left, assembly	1
671070	PANEL, body side and rear, right, assembly	1
671067	PANEL, wheelhouse, left, assembly	1
671068	PANEL, wheelhouse, right, assembly	1
663505	PLATE, filler, fuel tank, assembly	1
A-3051	SOCKET, fastener, side curtains to body	4

Part No.	Description	Quan. Req'd. Per Assy.
	GROUP 31-08—TAIL GATE	
663188	**Gate, Tail, Assembly**	1
651589	CHAIN, tail gate, left, assembly (Includes cover and hook)	1
651590	CHAIN, tail gate, right, assembly (Includes cover and hook)	1
651594	COVER, chain, assembly	2
52230	WASHER, flat, No. 6 — Chain cover to chain	4
52025	RIVET, ov. hd., 9/64" x 1/2", tubular — Chain cover to chain	4
663669	HINGE, tail gate, body	2
GM-427926	BOLT, hex. hd., 3/8"-16 x 7/8" — Tail gate hinge to body	4
53908	NUT, hex., 3/8"-16 — Tail gate hinge to body	4
52708	LOCKWASHER, 3/8" — Tail gate hinge to body	4
651593	LINK, tail gate chain	2
663111	LOCK, tail gate, body half, left	1
663112	LOCK, tail gate, body half, right	1
663194	LOCK, tail gate half, left	1
663195	LOCK, tail gate half, right	1
663428	PIN, tail gate hinge (7" long)	2
	GROUP 31-09—DRIVER'S SEAT	
	Model CJ-2A	
663615	**Seat, Driver's, Assembly**	1
663617	COVER, trim, driver's seat back, assembly	1
663698	COVER, trim, driver's seat cushion, assembly	1
663621	CUSHION, driver's seat, assembly	1
53782	BOLT, hex. hd., 5/16"-24 x 1 1/2" — Driver's seat cushion to frame	2
53047	LOCKWASHER, 5/16" — Driver's seat cushion to frame	2
663598	FRAME, driver's seat, assembly	1
53933	BOLT, hex. hd., 5/16"-18 x 7/8" — Driver's seat frame to front floor	2
53735	WASHER, flat, 5/16" — Driver's seat frame to front floor	2
53047	LOCKWASHER, 5/16" — Driver's seat frame to front floor	2
53936	BOLT, hex. hd., 5/16"-24 x 1 1/4" — Driver's seat frame to wheelhouse top panel	1
53735	WASHER, flat, 5/16" — Driver's seat frame to wheelhouse top panel	1
53047	LOCKWASHER, 5/16" — Driver's seat frame to wheelhouse top panel	1
666504	LEG, driver's seat	1
663607	PAN, driver's seat, assembly	1
663686	SPRING, front seat back, assembly	1
663558	SPRING, front seat cushion, assembly	1
	Model CJ-3A	
671373	**Seat, Driver's, Assembly (Trimmed and Complete)**	1
663609	CLIP, retaining, driver's seat pan	2
671374	COVER, trim, driver's seat back, assembly	1
671379	COVER, trim, driver's seat cushion, assembly	1
671376	CUSHION, driver's seat, assembly	1
52721	BOLT, hex. hd., 5/16"-24 x 5/8" — Driver's seat cushion to seat frame	2
52558	LOCKWASHER, 5/16" — Driver's seat cushion to seat frame	2
670384	FRAME, driver's seat, assembly (Welding)	1
53390	BOLT, hex. hd., 5/16"-18 x 7/8" — Driver's seat frame to front floor	2
53735	WASHER, flat, 5/16" — Driver's seat frame to front floor	2
52558	LOCKWASHER, 5/16" — Driver's seat frame to front floor	2
53936	BOLT, hex. hd., 5/16"-24 x 1 1/4" — Driver's seat frame to wheelhouse panel	1
53735	WASHER, flat, 5/16" — Driver's seat frame to wheelhouse panel	1
52558	LOCKWASHER, 5/16" — Driver's seat frame to wheelhouse panel	1
670371	LEG, driver's seat	1
53933	BOLT, hex. hd., 5/16"-18 x 7/8" — Driver's seat rear leg to rear floor	1
52558	LOCKWASHER, 5/16" — Driver's seat rear leg to rear floor	1
53075	NUT, tee, 5/16"-24 (In driver's seat back)	1
671291	NUT, weld, 5/16"-24 (Int'ch'ble with A-12085)	2
A-12085	NUT, weld, 5/16"-24 (Int'ch'ble with 671291)	2
663607	PAN, driver's seat, assembly (Welding)	1
670372	PANEL, front seat back	1
605688	RINGS, fastening, trim	As req'd.
663686	SPRING, driver's seat back, assembly	1
670425	SPRING, driver's seat cushion, assembly	1
52990	SCREW, ov. hd., No. 10 x 1/2" — Trim to seat frame	12
53650	WASHER, finish, No. 10 (Int'ch'ble with 53732) — Trim to seat frame	12
53732	WASHER, finish, No. 10 (Int'ch'ble with 53650) — Trim to seat frame	12
	GROUP 31-09A—SPARE TIRE CARRIER	
668528	BRACKET, spare wheel carrier (For left side of body) **(After Serial No. 176061, Up to Serial No. 185769)**	1
663421	BRACKET, support, spare wheel, assembly	1
52543	BOLT, hex. hd., 3/8"-24 x 3/4" — Spare wheel support bracket to body	2
53935	BOLT, hex. hd., 3/8"-24 x 1 5/8" — Spare wheel support bracket to body	2
50922	NUT, hex., 3/8"-24 — Spare wheel support bracket to body	4
52046	LOCKWASHER, 3/8" — Spare wheel support bracket to body	4
671157	DAMPENER, vibration, spare wheel (Use with 6.00—16 tires)	1

Part No.	Description	Quan. Req'd. Per Assy.
	GROUP 31-09A—SPARE TIRE CARRIER (Continued)	
GM-133784	SCREW, fl. hd., ¼"-20 x 1½" } Dampener to body side panel	2
52669	NUT, hex., ¼"-20 } Dampener to body side panel	2
52668	WASHER, flat, ¼" } Dampener to body side panel	2
52667	LOCKWASHER, ¼" } Dampener to body side panel	2
671158	DAMPENER, vibration, spare wheel (Use with 7.00—15 tires)	1
GM-120629	SCREW, fl. hd., ¼"-20 x ⅞" (Dampener to body side panel)	2
641953	NUT, spare wheel to carrier stud **(Up to Serial No. .....—CJ-2A)**	3
635516	NUT, spare wheel to carrier stud **(After Serial No. .....—CJ-2A and All CJ-3A)**	3
664418	STUD, support, spare wheel	3
	For Body Bracket, See Group 31-07.	
	GROUP 31-09B—SPARE WHEEL LOCK	
666628	**Kit, Spare Wheel Lock (Use 670343)**	1
	Consists of:	
666584	1 LOCK, spare wheel, assembly **(Use 666628)**	
A-1318	1 NUT, spare wheel lock	
116844	KEY, spare wheel lock cylinder (When ordering give key number)	1
	GROUP 31-10—PLATES, SEALS AND COVERS	
664379	COVER, gearshift lever housing **(After Serial No. 38221)**	1
663193	COVER, hole, trailer electric coupling socket **(Up to Serial No. 224391)**	1
52791	SCREW, rd. hd., ¼"-20 x ½" } Cover to rear panel **(Up to Serial No. 224391)**	4
52217	NUT, hex., ¼"-20 } Cover to rear panel **(Up to Serial No. 224391)**	4
53058	LOCKWASHER, ¼" } Cover to rear panel **(Up to Serial No. 224391)**	4
663462	COVER, inspection, brake master cylinder	1
53929	BOLT, hex. hd., ¼"-20 x ⅝" } Brake cylinder inspection cover to floor pan **Model CJ-2A**	5
52706	LOCKWASHER, ¼" } Brake cylinder inspection cover to floor pan **Model CJ-2A**	5
GM-221154	SCREW, pan hd., No. 14 x ½" (Brake cylinder inspection cover to floor)—**Model CJ-3A**	3
666611	GROMMET, transfer case gearshift	1
663794	GROMMET, transfer case shift lever, assembly **(Use 666611)**	1
663496	GROMMET, transfer case shift lever floor (Rubber) **(Up to Serial No. 38221) (Use 666611)**	1
664377	NUT, welding, No 12-24 (For transmission floor plate) **(After Serial No. 38221)**	4
663197	PLATE, cover, steering column toe board **(Up to Serial No. 38221)**	2
663791	PLATE, cover, steering column toe board **(After Serial No. 38221)**	2
53926	SCREW, bd. hd., No. 10 x ⅝" (Plate to floor pan)	6
667747	PLATE, cover, transmission floor plate (Included with front floor pan 667746) **(Up to Serial No. 38221)**	1
53926	SCREW, bd. hd., No. 10 x ⅝" (Plate to floor pan)	4
664378	PLATE, gearshift lever housing cover **(After Serial No. 38221)**	1
53976	SCREW, rd. hd., No. 12-24 x ½" } Gearshift lever housing cover to transmission floor plate	4
53372	LOCKWASHER, No. 12 } Gearshift lever housing cover to transmission floor plate	4
663473	PLATE, power take-off shift cover	1
53926	SCREW, bd. hd., No. 10 x ⅝" (Plate to front floor)	4
663141	PLATE, transmission floor **(Up to Serial No. 38221) (Use 663789)**	1
53929	BOLT, hex. hd., ¼"-20 x ⅝" } Plate to floor pan	7
53058	LOCKWASHER, ¼" } Plate to floor pan	7
663789	PLATE, transmission floor **(After Serial No. 38221)**	1
52889	SCREW, rd. hd., No. 10 x ⅝" } Transmission floor plate to floor	4
52221	LOCKWASHER, No. 10 } Transmission floor plate to floor	4
663490	RING, transfer case shift lever grommet **(Up to Serial No. 38221) (Use 663793)**	1
663793	RING, transfer case shift lever grommet **(After Serial No. 38221)**	1
53926	SCREW, bd. hd., No. 10 x ⅝" (Ring to front floor)	4
A-2932	SEAL, brake cylinder inspection cover **(Model CJ-3A)**	1
A-3782	SEAL, floor, accelerator treadle rod, assembly **(Use 643921)**	1
643921	SEAL, floor, accelerator treadle rod, assembly **(Use 646073)**	1
646073	SEAL, floor, accelerator treadle rod, assembly	1
663059	SEAL, steering column to floor **(Up to Serial No. 38221)**	1
663792	SEAL, steering column to floor **(After Serial No. 38221)**	1
663156	SEAL, transmission floor plate **(Up to Serial No. 38221)**	1
663790	SEAL, transmission floor plate **(After Serial No. 38221)**	1
	GROUP 31-11—WINDSHIELD ASSEMBLY	
	Model CJ-2A	
663626	**Windshield Assembly**	1
663671	ARM, adjusting, windshield **(Up to Serial No. 15304)**	2
663707	ARM, adjusting, windshield, inner, assembly **(After Serial No. 15304)**	2
663712	ARM, adjusting, windshield, outer, assembly **(After Serial No. 15304)**	2
664283	ARM, windshield, assembly **(After Serial No. 15304)**	2
664801	BLOCK, weather, windshield hinge (felt) **(After Serial No. 15304)**	2
A-3721	BRACKET, pivot, windshield, assembly	2
53066	BOLT, hex. hd., 5/16"-18 x ⅝" } Windshield pivot bracket to cowl	4
6167	NUT, hex., 5/16"-18 } Windshield pivot bracket to cowl	4
53047	LOCKWASHER, 5/16" } Windshield pivot bracket to cowl	4
663702	BRACKET, windshield adjusting arm to glass frame, assembly **(After Serial No. 15304)**	2
A-4299	BRACKET, windshield adjusting arm to tubing frame, assembly **(Up to Serial No. 15304)**	2
663708	BRACKET, windshield adjusting arm to tubing frame, left, assembly **(After Serial No. 15304)**	1

Part No.	Description	Quan. Req'd. Per Assy.
	GROUP 31-11—WINDSHIELD ASSEMBLY (Continued)	
663709	BRACKET, windshield adjusting arm to tubing frame, right, assembly **(After Serial No. 15304)**	1
664261	BUMPER, back stop (rubber) **(After Serial No. 15304)**	2
A-4306	BUSHING, windshield adjusting arm bracket **(After Serial No. 15304)**	2
A-3763	CATCH, windshield clamp	2
663677	CLAMP, windshield, assembly	2
53921	SCREW, fl. hd., 1/4"-20 x 3/4" (Windshield clamp to instrument panel)	4
663676	BOLT, hex. hd., 1/4"-20 x 1 7/16" } Windshield clamp to windshield	4
53823	SCREW, ov. hd., No. 10 x 1/2" } Windshield clamp to windshield	2
663675	LOCKWASHER, 1/4" } Windshield clamp to windshield	4
663276	CROSS-PIECE, windshield frame, upper, assembly	1
663274	FRAME, tubular, windshield	1
663628	FRAME, tubular, windshield, assembly	1
663694	FRAME, windshield glass, lower, assembly	1
663630	FRAME and GLASS, windshield, assembly	1
A-2478	GLASS, windshield	2
A-4302	HANDLE, windshield frame **(Up to Serial No. 15304)**	1
A-3761	KNOB, windshield adjusting arm **(Up to Serial No. 15304)**	2
664793	LOCK, center, windshield, assembly	1
664264	SCREW, special hd., No. 10-32 x 3/8" } Windshield center lock to glass frame **(After Serial No. 15304)**	2
53194	LOCKWASHER, No. 10 } Windshield center lock to glass frame **(After Serial No. 15304)**	2
A-3713	LOOP, footman (On radiator guard for hold down strap)	1
663678	NUT, wing, 5/16"-18 **(Use 669031)**	2
669031	NUT, wing, 5/16"-18	2
A-2939	PLATE, tapping, windshield clamp catch	2
663181	PLATE, top bow with storage bolt, assembly	2
663198	RETAINER, storage, center top bow	2
668921	SCREW, pivot, windshield, 3/8"-24, shoulder dia. 5/8" **(After Serial No. 154883)**	2
668922	WASHER, flat, 5/8" I.D., 1" O.D. (For pivot screw) **(After Serial No. 154883)**	2
663672	SCREW, pivot, windshield adjusting arm (fil. hd., 1/4"-28 x .470) **(After Serial No. 15304)**	4
A-3755	SCREW, thumb, windshield pivot **(Up to Serial No. 154883)**	2
663705	SCREW, windshield adjusting arm **(After Serial No. 15304)**	2
663674	SCREW, windshield frame (rd. hd., No. 10-32 x 1/2")	2
53822	NUT, acorn, No. 10-32 } Windshield frame screw	2
53820	LOCKWASHER, No. 10 } Windshield frame screw	2
54116	SCREW, bd. hd., 1/4"-28 x 7/8" } Rear view mirror to windshield glass frame	1
54117	NUT, acorn, 1/4"-28 } Rear view mirror to windshield glass frame	1
53340	LOCKWASHER, 1/4" } Rear view mirror to windshield glass frame	1
663673	SCREW, windshield frame corner (rd. hd., No. 8-32 x 7/16")	4
53070	LOCKWASHER, No. 8, ext. (Windshield frame corner screw)	4
663205	STRAP, hold down, windshield, assembly (Olive Drab)	1
668388	STRAP, hold down, windshield, assembly (Slate Gray)	1
664803	STRIKER, windshield center lock	1
54022	SCREW, bd. hd., No. 12-11 x 5/8" (Striker to windshield tubing frame) **(After Serial No. 15304)**	2
663269	STUD, single type (Windshield top fastener)	12
53821	WASHER, plain, 5/16" (Windshield adjusting arm) **(Up to Serial No. 15304)**	6
A-4260	WASHER, spring, windshield adjusting arm **(Up to Serial No. 15304)**	2
663706	WASHER, spring, windshield adjusting arm **(After Serial No. 15304)**	4
A-2483	WASHER, spring, windshield frame adjusting arm pivot screw	2
A-2220	WASHER, spring, windshield pivot	4
	Model CJ-3A	
671031	**Windshield Complete Assembly**	1
671000	**Windshield Complete Assembly (Welding)**	1
668921	BOLT, pivot, windshield, 3/8"-24, shoulder dia. 5/8"	2
671003	BRACKET, door hinge, upper, left	1
671004	BRACKET, door hinge, upper, right	1
671213	BRACKET, pivot, windshield, left	1
671214	BRACKET, pivot, windshield, right	1
53848	BOLT, hex. hd., 5/16"-18 x 1" } Windshield pivot bracket to cowl	4
52850	NUT, hex. hd., 5/16"-18 } Windshield pivot bracket to cowl	4
53821	WASHER, flat, 5/16" } Windshield pivot bracket to cowl	4
52558	LOCKWASHER, 5/16" } Windshield pivot bracket to cowl	4
671119	BRACKET, support, top side rail	2
A-3763	CATCH, windshield clamp	2
53921	SCREW, fl. hd., 1/4"-20 x 3/4" (Whidshield clamp catch to instrument panel)	4
663677	CLAMP, windshield, assembly	2
GM-121920	BOLT, hex. hd., 1/4"-20 x 1 3/8" } Windshield clamp to windshield	4
53823	SCREW, ov. hd., No. 10 x 1/2" } Windshield clamp to windshield	2
52667	LOCKWASHER, 1/4" } Windshield clamp to windshield	4
670911	GLASS, windshield	1
671387	HANDLE, ratchet, windshield ventilator lid	1
GM-160035	SCREW, rd. hd., No. 10-32 x 3/8" } Ratchet handle to vent lid	1
53914	WASHER, flat, No. 10 } Ratchet handle to vent lid	1
53381	LOCKWASHER, No. 10 } Ratchet handle to vent lid	1
671197	HINGE, windshield ventilator lid, assembly	2
671240	LID, ventilator, windshield, assembly (Includes ratchet, ratchet handle and weatherstrip)	1
671253	LID, ventilator, windshield, assembly (Welding)	1