Part No.	Description	Quan. Req'd. Per Assy.
	GROUP 31-11—WINDSHIELD ASSEMBLY (Continued)	
GM-160035	SCREW, pan hd., No. 10-32 x 3/8" } Windshield vent lid to windshield	2
53061	NUT, hex., No. 10-32	2
53381	LOCKWASHER, No. 10	2
670953	LOOP, top bow spacer support	1
671198	PIN, pivot, windshield ventilator lid ratchet	1
671015	PLATE, tapping, windshield pivot bracket	2
671705	RETAINER, door curtain, left, assembly (Includes upper door hinge bracket, left)	1
671706	RETAINER, door curtain, right, assembly (Includes upper door hinge bracket, right)	1
671005	RETAINER, door curtain to cowl side panel, left	1
671315	RETAINER, door curtain to cowl side panel, right	1
53976	SCREW, rd. hd., No. 12-24 x 1/2" } Door curtain retainer to cowl panel	4
54026	NUT, hex., No. 12-24	4
53556	LOCKWASHER, No. 12	4
671205	SPRING, windshield ventilator lid ratchet	1
671385	STOP, windshield ventilator lid ratchet	1
668388	STRAP, hold down, windshield, assembly	1
670924	STRIP, filler, weatherstrip, windshield glass	1
668922	WASHER, flat, special, 5/8" I.D., 1" O.D. (Windshield to body)	2
A-2220	WASHER, spring, windshield pivot (Windshield to body)	2
671316	WEATHERSTRIP, ventilator lid	1
670923	WEATHERSTRIP, windshield glass	1
671045	WEATHERSTRIP, windshield to cowl	1
A-2489	SCREW, pan hd., No. 10 x 1/2", tapping (Weatherstrip to windshield)	17
	GROUP 31-12—WINDSHIELD MOULDING AND SEALS (CJ-2A)	
A-2479	PADDING, windshield glass (Everseal, 1 1/8" x 73")	2
A-2250	WEATHERSTRIP, windshield	1
A-2476	WEATHERSTRIP, windshield frame to cowl	1
A-2489	SCREW, sheet metal, No. 10 x 1/2" (Windshield to cowl weatherstrip)	15
	GROUP 31-13—WINDSHIELD WIPER (Vacuum Operated)	
663636	**Motor, Windshield Wiper (Vacuum) (Model CJ-2A)**	1
671921	**Motor, Windshield Wiper (Vacuum) (Model CJ-3A)**	1
53934	SCREW, rd. hd., No. 10-32 x 7/8" } Motor to windshield frame	2
53381	LOCKWASHER, No. 10	2
A-1265	BUSHING, reducing, 1/4" to 1/8" (On intake manifold)	1
345961	BUSHING, rubber, 13/32" I.D. (Windshield wiper hose through cowl)	1
78316	CLAMP, 1/4", wiper tubing to windshield	4
53920	SCREW, rd. hd., No. 10 x 1/2", tapping (Clamp to windshield)	4
387891	CONNECTOR, flared tube, 1/4" **(Up to Serial No. 148679)**	1
663365	HOSE, windshield wiper, engine end (15 1/2" long)	1
663466	HOSE, windshield wiper, wiper end (8" long) **(Model CJ-2A)**	1
671965	HOSE, windshield wiper, wiper end (9 1/2" long) **(Model CJ-3A)**	1
384568	NUT, inverted flared tube, 1/4"	1
663637	TUBE, manifold to windshield wiper **(Model CJ-2A)**	1
671053	TUBE, manifold to windshield wiper **(Model CJ-3A)**	1
384569	UNION, inverted flared tube, 1/4" **(After Serial No. 148679)**	1
	GROUP 31-13A—WINDSHIELD WIPER (Manual Control)	
663648	ARM and BLADE, windshield wiper, assembly **(Model CJ-2A)**	1
671175	ARM and BLADE, windshield wiper, assembly **(Model CJ-3A)**	1
663647	HANDLE and KNOB, windshield wiper, assembly	1
663649	NUT, hex., No. 12-24 } Windshield wiper handle to arm	1
663651	LOCKWASHER, No. 12	1
663650	WASHER, windshield wiper handle to windshield frame	1
	GROUP 31-14—WINDSHIELD WIPER ARM AND BLADE	
	Model CJ-2A	
663368	ARM, windshield wiper, assembly (7")	1
663367	BLADE, windshield wiper arm (9")	1
663369	NUT, hex., No. 10-32, special acorn (Windshield wiper arm to shaft)	1
	Model CJ-3A	
671137	ARM, windshield wiper, left, assembly	1
671041	BLADE, windshield wiper, assembly (8")	1
663369	NUT, hex., No. 10-32, special acorn (Windshield wiper arm to shaft)	1
	GROUP 31-15—REAR VIEW MIRROR (Outside)	
	Model CJ-2A	
663165	**Mirror, Rear View, Assembly** (Includes mirror, arm and bracket)	1
53915	SCREW, rd. hd., No. 12-24 x 5/8" **(Up to Serial No. 10556)** } Rear view mirror to body	4
52916	SCREW, rd. hd., No. 12-24 x 3/4" **(After Serial No. 10556)**	3
6989	NUT, hex., No. 12-24	4
51969	LOCKWASHER, No. 12	4
116965	ARM and MOUNTING BRACKET, rear view mirror, assembly	1

Part No.	Description	Quan. Req'd. Per Assy.
	GROUP 31-15—REAR VIEW MIRROR (Outside) (Continued)	
116966	BRACKET, mounting, rear view mirror, assembly	1
663642	MIRROR, rear view	1
	Model CJ-3A	
666767	**Mirror, Rear View, Assembly**	1
53915	SCREW, rd. hd., No. 12-24 x 5/8" (Rear view mirror to cowl side panel)	4
54026	NUT, hex., No. 12-24 (Rear view mirror to cowl side panel)	4
53556	LOCKWASHER, 1/4" (Rear view mirror to cowl side panel)	4
	Serviceable Components for Mirror 666767:	
666768	ARM and MOUNTING BRACKET, rear view mirror, assembly	1
663642	MIRROR, rear view	1

GROUP 32—BUMPER

GROUP 32-01—FRONT BUMPER

640714	ANGLE, front bumper clip, left	1
640715	ANGLE, front bumper clip, right	1
640713	BAR, front bumper (Front bumper bar to frame; **Up to Serial No. 215649**)	1
50929	BOLT, hex. hd., 5/16"-24 x 7/8" (Front bumper bar to frame; **Up to Serial No. 215649**)	4
51823	BOLT, hex. hd., 5/16"-24 x 4 1/2" (Front bumper bar to frame; **Up to Serial No. 215649**)	4
5910	NUT, hex., 5/16"-24 (Front bumper bar to frame; **Up to Serial No. 215649**)	8
51833	LOCKWASHER, 5/16" (Front bumper bar to frame; **Up to Serial No. 215649**)	8
645119	BAR, front bumper (Front bumper bar to frame; **After Serial No. 215649**)	1
51396	BOLT, hex. hd., 5/16"-24 x 3/4" (Front bumper bar to frame; **After Serial No. 215649**)	8
5910	NUT, hex., 5/16"-24 (Front bumper bar to frame; **After Serial No. 215649**)	8
51833	LOCKWASHER, 5/16" (Front bumper bar to frame; **After Serial No. 215649**)	8
A-1129	GUSSET, front bumper, lower, left	1
A-1130	GUSSET, front bumper, lower, right	1
A-1127	GUSSET, front bumper, upper, left	1
A-1128	GUSSET, front bumper, upper, right	1
A-1755	REINFORCEMENT, frame front bumper, left	1
A-1756	REINFORCEMENT, frame front bumper, right	1
50163	BOLT, hex. hd., 3/8"-24 x 3/4" (Gussett and reinforcement to frame)	2
5010	LOCKWASHER, 3/8" (Gussett and reinforcement to frame)	2
52832	RIVET, rd. hd., 3/8" x 7/8" (Gussett and reinforcement to frame)	2
A-1120	SPACER, front bumper gussett	4
640743	SPACER, snow plow bolt	1

GROUP 33—TOOLS

GROUP 33-01—TOOLS

640536	DRIVER, screw (Int'ch'ble with 646217)	1
646217	DRIVER, screw (Int'ch'ble with 640536)	1
306715	HANDLE, spark plug wrench	1
A-1240	JACK, screw type	1
50585	PLIERS, combination, slip joint (Int'ch'ble with 645356)	1
645356	PLIERS, combination, slip joint (Int'ch'ble with 50585)	1
641504	PUMP, tire, assembly (Manual Type) (Int'ch'ble with 647862)	1
647862	PUMP, tire, assembly (Manual Type) (Int'ch'ble with 641504)	1
A-348	WRENCH, socket, wheel nut, 3/4" **(Up to Serial No. 168642) (Use 645609)**	1
645609	WRENCH, socket, wheel nut, 13/16" **(After Serial No. 168642)**	1
637635	WRENCH, spark plug socket	1

GROUP 33-02—TOOL BOX

Model CJ-2A

(For Tool Box see **"Extension 663419"** in Group 31-04)

663481	LID, tool box, assembly	1
663476	PIN, tool box lid hinge	2
950985	RETAINER, tool box lid lifting ring	1
5308	RIVET, rd. hd., 1/8" x 1/4" (Retainer to tool box lid)	2
950984	RING, lifting, tool box lid	1
663654	SPRING, tool box lid catch	1
53784	RIVET, rd. hd., 5/32" x 3/16" (Catch spring to tool box lid)	2

Model CJ-3A

(For Tool Box see **"Extension 670915"** in Group 31-04)

670946	LID, tool box, assembly	1
663476	PIN, tool box lid hinge	2
670926	RING and RING RETAINER, tool box lid, assembly	1
6212	RIVET, fil. hd., 1/8" x 3/8" **(Use 5659)**	2
5659	RIVET, rd. hd., 1/8" x 3/8" (Ring retainer assembly and lid catch spring to tool box lid)	2
670993	SPRING, tool box lid ring	1
670937	WEATHERSTRIP, tool box lid	1

Part No.	Description	Quan. Req'd. Per Assy.

GROUP 34—PAINT

GROUP 34-01—PAINT

666781	ENAMEL, American Black, Air Dry	As req'd
116768	ENAMEL, Autumn Yellow, Air Dry	As req'd
670816	ENAMEL, Emerald Green, Air Dry	As req'd.
666759	ENAMEL, Harvard Red, Air Dry	As req'd
664523	ENAMEL, Harvest Tan, Air Dry	As req'd
666677	ENAMEL, Luzon Red, Air Dry	As req'd
666760	ENAMEL, Michigan Yellow, Air Dry	As req'd
666754	ENAMEL, Normandy Blue, Air Dry	As req'd
667723	ENAMEL, Olive Drab, Air Dry	As req'd.
664524	ENAMEL, Pasture Green, Air Dry	As req'd
666697	ENAMEL, Picket Gray, Air Dry	As req'd
670067	ENAMEL, Potomac Gray, Air Dry	As req'd.
116767	ENAMEL, Sunset Red, Air Dry	As req'd
670824	ENAMEL, Universal Beige, Air Dry	As req'd.
666676	ENAMEL, Wake Ivory, Air Dry	As req'd
116763	PRIMER, Black, Air Dry	As req'd
669064	PRIMER, synthetic surfacer (Air dry sanding type)	As req'd.
641240	THINNER, general purpose	As req'd

GROUP 35—SPECIAL EQUIPMENT AND ACCESSORIES

GROUP 35-01—DRAW BAR

640528	**Kit, Draw Bar**	1
	Consists of:	
640703	1 BAR, draw, assembly	
	1 DRAWING, installation	
640321	1 PLATE, draw bar, assembly (First 250 vehicles only)	
640737	1 PLATE, draw bar, assembly	
640648	4 PLATE, reinforcement, draw bar	
53865	2 BOLT, hex. hd., 3/4"-16 x 2"	Draw bar plate to rear cross member
53684	2 NUT, hex., 3/4"-16	
50960	2 LOCKWASHER, 3/4"	
53818	2 BOLT, hex. hd., 7/16"-20 x 1 1/8"	Inner brace to rear cross member
53142	2 BOLT, hex. hd., 1/2"-20 x 1 1/4"	
52164	2 NUT, hex., 7/16"-20	
50811	2 NUT, hex., 1/2"-20	
53183	2 LOCKWASHER, 7/16"	
53045	2 LOCKWASHER, 1/2"	
50847	4 BOLT, hex. hd., 3/8"-24 x 1"	Outer brace to rear cross member
50922	4 NUT, hex., 3/8"-24	
52046	4 LOCKWASHER, 3/8"	
GM-123917	2 BOLT, hex. hd., 9/16"-18 x 1 1/2"	Strap to intermediate cross member
GM-443342	2 NUT, hex., 9/16"-18, huglock	

GROUP 35-02—POWER TAKE-OFF

640726	**Kit, Power Take-Off, Complete**	1
	Consists of:	
640725	1 KIT, front power take-off	
640869	1 KIT, rear power take-off	
640725	KIT, front power take-off	1
	Consists of:	
53690	5 BOLT, hex. hd., 3/8"-16 x 1"	
666610	1 GROMMET, gearshift	
640708	1 PLATE, retaining, cover	
640633	1 POWER TAKE-OFF, front, assembly	
640869	KIT, rear power take-off	1
	Consists of:	
647676	1 POWER TAKE-OFF, rear, assembly	
53686	3 BOLT, hex. hd., 7/16"-20 x 2 1/4"	Rear unit to frame
52164	3 NUT, hex., 7/16"-20	
53183	3 LOCKWASHER, 7/16"	
647015	1 REINFORCEMENT, rear cross member	
640639	1 SHAFT, propeller, power take-off, assembly	
630595	8 BOLT, hex. hd., 3/8"-24 x 1"	Propeller shaft to front and rear companion flanges
630598	8 NUT, hex., 3/8"-24	
52046	8 LOCKWASHER, 3/8"	
640716	1 SHIELD, power take-off, assembly	
53777	4 BOLT, hex. hd., 7/16"-14 x 3/4"	Shield attaching
53183	4 LOCKWASHER, 7/16"	
640207	2 SPACER, axle bumper	
51308	4 BOLT, hex. hd., 5/16"-24 x 2" (Bumper spacer attaching)	
640461	1 SPACER	

Part No.	Quan. Req'd. Per Assy.	Description

GROUP 35-02—POWER TAKE-OFF (Continued)

53111	4	BOLT, hex. hd., 3/8"-24 x 3/4"	Use only when draw bar is not used
50922	4	NUT, hex., 3/8"-24	
52046	4	LOCKWASHER, 3/8"	

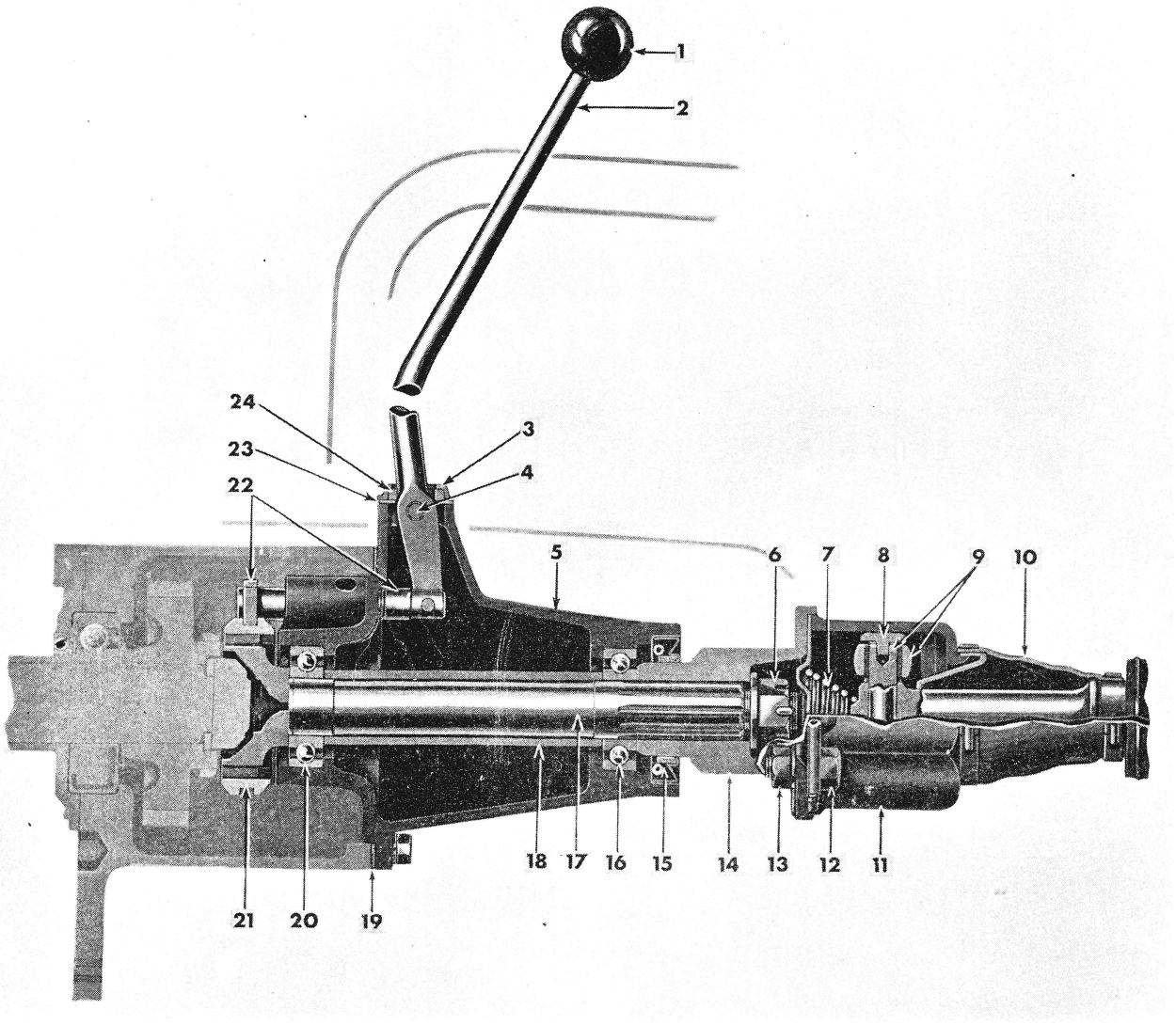

FIG. No. 58—POWER TAKE-OFF, FRONT UNIT

Ref. No.	Part No.	Description	Group No.	Ref. No.	Part No.	Description	Group No.
1	A-971	Ball	35-03	13	630598	Nut	35-05
2	640659	Lever	35-03	14	640656	Flange, companion	35-03
3	640624	Plate	35-03	15	A-958	Oil Seal	35-03
4	640630	Pin, shift lever	35-03	16	A-10119	Bearing	35-03
5	640658	Housing	35-03	17	640620	Gear, drive	35-03
6	640632	Nut	35-03	18	640621	Spacer	35-03
7	636232	Spring	35-05	19	A-7361	Gasket, housing	35-03
8	115942	Button and Spring	35-05	20	A-10119	Bearing	35-03
9	115828	Ball and Roller	35-05	21	640343	Sleeve	35-03
10	636235	Cover	35-05	22	640617	Fork and Rod	35-03
11	636233	Body	35-05	23	640626	Plate	35-03
12	630595	Bolt	35-05	24	640625	Seal	35-03

Part No.	Description	Quan. Req'd. Per Assy.
	GROUP 35-03—POWER TAKE-OFF, FRONT UNIT	
640633	**Power Take-Off, Front Unit, Assembly**	1
53690	BOLT, hex. hd., 3/8"-16 x 1" (Front unit to transfer case)	5
	The Following Items are Included in 640633 Assembly:	
A-971	BALL, power take-off shift lever	1
640627	BALL, power take-off shift shaft (steel)	1
A-10119	BEARING, power take-off drive gear	2
640656	FLANGE, companion, power take-off	1
640632	NUT, hex., 5/16"-18 (Flange to drive gear)	1
640622	WASHER, 5/16", special (Flange to drive gear)	1
52803	PIN, cotter, 1/8" x 7/8" (Flange to drive gear)	1
640617	FORK and ROD, shifting, power take-off, assembly	1
A-7361	GASKET, power take-off drive housing	1
640620	GEAR, drive, power take-off (15 teeth)	1
640658	HOUSING, drive, power take-off	1
640659	LEVER, shift, power take-off	1
A-958	OIL SEAL, power take-off drive gear	1
640630	PIN, power take-off shift lever	1
640624	PLATE, power take-off drive housing shift lever	1
640708	PLATE, retaining, power take-off cover	1
640626	PLATE, retaining, power take-off lever	1
640623	SCREW and WASHER, rd. hd., No. 10-32 x 3/8" (Plate to housing)	4
640625	SEAL, power take-off shift lever	1
640343	SLEEVE, power take-off to propeller shaft	1
640621	SPACER, power take-off drive gear bearing	1
640628	SPRING, transfer gear shifter shaft lock plunger	1
	GROUP 35-04—POWER TAKE-OFF, REAR UNIT	
640553	**Power Take-Off, Rear Unit, Less Shield, Assembly (Up to Serial No. .....)**	1
640869	**Power Take-Off, Rear Unit, with Shield, Assembly (Up to Serial No. .....)**	1
647676	**Power Take-Off, Rear Unit, Assembly (After Serial No. .....)**	1
53686	BOLT, hex. hd., 7/16"-20 x 2 1/4" (Rear unit to frame)	3
52164	NUT, hex., 7/16"-20 (Rear unit to frame)	3
53183	LOCKWASHER, 7/16" (Rear unit to frame)	3
	The Following Items are Included in Rear Power Take-Off Unit:	
A-934	BREATHER Assembly	1
640490	CASE, power take-off gear, assembly	1
53594	CONE and ROLLERS, power take-off input and output shaft	4
53320	CUP, power take-off input and output shaft bearing	4
641253	FLANGE, companion, power take-off	1
635865	BOLT, hex. hd., 3/8"-24 x 1" (Flange to input shaft)	1
5010	LOCKWASHER, 3/8" (Flange to input shaft)	1
640798	GASKET, bearing retainer	1
640547	GASKET, pilot, power take-off oil retainer	2
640543	GASKET, power take-off cover plate	2
640478	GEAR, drive, rear power take-off (24 teeth, R.H. helix) **(Use (1) Each 647677 and 647678)**	1
647677	GEAR, drive, rear power take-off (22 teeth, L.H. helix) **(After Serial No. .....)**	1
640477	GEAR, driven, rear power take-off (20 teeth, L.H. helix) **(Use (1) Each 647677 and 647678)**	1
647678	GEAR, driven, rear power take-off (22 teeth, R.H. helix) **(After Serial No. .....)**	1
640545	OIL SEAL, input and output shaft	2
640542	PLATE, cover, power take-off bearing retainer	2
51492	SCREW, rd. hd., 1/4"-20 x 1/2" (Cover plate to retainer)	8
52706	LOCKWASHER, 1/4" (Cover plate to retainer)	8
5140	PLUG, pipe, 1/2" sq. hd. (Power take-off gear case drain and filler plug)	2
640220	REINFORCEMENT, frame cross member, rear	1
640479	RETAINER, power take-off bearing, assembly	2
6299	BOLT, hex. hd., 3/8"-16 x 7/8" (Retainer to gear case)	4
5010	LOCKWASHER, 3/8" (Retainer to gear case)	4
640546	RETAINER and PILOT, power take-off oil seal, assembly	2
51984	SCREW, fl. hd., 1/4"-20 x 5/8" (Retainer to gear case)	6
53724	LOCKWASHER, 1/4", ext. (Retainer to gear case)	6
640489	SHAFT, input, power take-off	1
640498	SHAFT, output, power take-off	1
640797	NUT, hex., 3/4"-16, special	2
640796	WASHER, tongued, 3/4"	2
640716	SHIELD, power take-off, assembly	1
53777	BOLT, hex. hd., 7/16"-14 x 3/4" (Shield to case)	4
53183	LOCKWASHER, 7/16" (Shield to case)	4
640549	SHIM, power take-off output shaft, .003 thick	As req'd.
640550	SHIM, power take-off output shaft, .005 thick	As req'd.
640551	SHIM, power take-off output shaft, .010 thick	As req'd.
640552	SHIM, power take-off output shaft, .030 thick	As req'd.
640793	SNAP RING, internal	3
384958	STUD, power take-off gear case	2
5901	NUT, hex., 3/8"-24 (Retainer to gear case stud)	2
5010	LOCKWASHER, 3/8" (Retainer to gear case stud)	2
635849	WASHER, power take-off companion flange	1

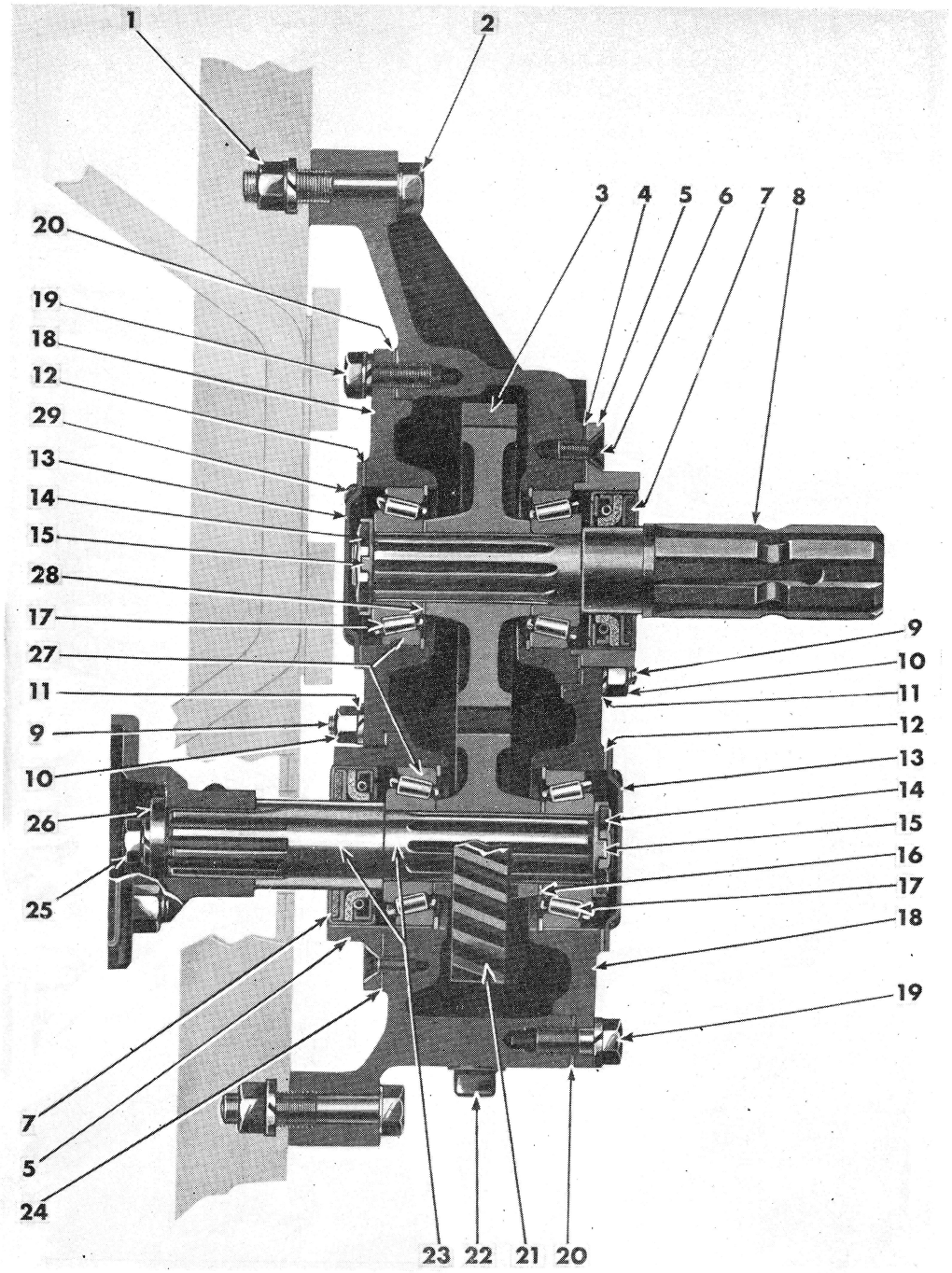

FIG. No. 59—POWER TAKE-OFF, REAR UNIT

Ref. No.	Part No.	Description	Group No.
1	52164	Nut	35-04
2	53686	Bolt	35-04
3	647678	Gear	35-04
4	640547	Gasket	35-04
5	640546	Retainer and Pilot	35-04
6	51984	Screw	35-04
7	640545	Oil Seal	35-04
8	640498	Shaft	35-04
9	384958	Stud	35-04
10	5901	Nut	35-04
11	5010	Lockwasher	35-04
12	640543	Gasket	35-04
13	640542	Plate	35-04
14	640797	Nut	35-04
15	640796	Washer	35-04
16	640550	Shim	35-04
17	53594	Cone and Rollers	35-04
18	640479	Retainer	34-04
19	6299	Bolt	35-04
20	640798	Gasket	35-04
21	647677	Gear	35-04
22	5140	Plug	35-04
23	640489	Shaft	35-04
24	640547	Gasket	35-04
25	635865	Bolt	35-04
26	635849	Washer	35-04
27	53320	Cup	35-04
28	640793	Snap Ring	35-04
29	51492	Screw	35-04

Part No.	Description	Quan. Req'd. Per Assy.
	GROUP 35-04—POWER TAKE-OFF, REAR UNIT (Continued)	
	The following four (4) items are to be used when Draw Bar Kit is not specified:	
53111	BOLT, hex. hd., 3/8"-24 x 3/4" } Reinforcement to frame	4
50922	NUT, hex., 3/8"-24 } Reinforcement to frame	4
52046	LOCKWASHER, 3/8" } Reinforcement to frame	4
640461	SPACER, reinforcement to frame	1
	GROUP 35-05—POWER TAKE-OFF PROPELLER SHAFT	
640639	**Shaft, Propeller, Power Take-Off, Assembly** (47 5/16" long)	1
630595	BOLT, hex. hd., 3/8"-24 x 1" } Propeller shaft to front and rear units	8
630598	NUT, hex., 3/8"-24 } Propeller shaft to front and rear units	8
5010	LOCKWASHER, 3/8" } Propeller shaft to front and rear units	8
	The following items are included in 640639 Assembly:	
115828	BALL and ROLLER, propeller shaft, assembly	4
636233	BODY, propeller shaft universal joint	1
115942	BUTTON and SPRING, centering, propeller shaft universal joint, assembly	4
116035	COVER, dust, propeller shaft universal joint (Lace-on type)	2
636235	COVER, grease, propeller shaft universal joint	2
116770	COVER, propeller shaft universal joint (Rubber)	2
636234	GASKET, propeller shaft universal joint body grease cover	2
117164	KIT, propeller shaft universal joint	1
	Consists of:	
115828	2 BALL and ROLLER	
636233	1 BODY, universal joint	
115942	2 BUTTON and SPRING, centering	
116035	1 COVER, dust	
636234	1 GASKET, body	
637380	1 PIN, trunnion	
636229	2 WASHER, thrust	
637380	PIN, trunnion, propeller shaft universal joint	2
636232	SPRING, compensating, propeller shaft	2
640637	TUBE, propeller shaft, assembly	1
	GROUP 35-06—PULLEY DRIVE	
	This Assembly to be used with 640726 Kit but is not a part of Power Take-Off Units.	
644193	**Kit, Pulley Drive**	1
	Consists of:	
640554	1 DRIVE, pulley, assembly	
53687	4 BOLT, hex. hd., 7/16"-14 x 1 1/2" (Pulley drive to rear unit)	
	The following items are included in 640554 Assembly:	
A-870	BREATHER Assembly	1
640497	CAP, pulley drive pinion bearing	1
6299	BOLT, hex. hd., 3/8"-16 x 7/8" } Cap to gear carrier	4
5010	LOCKWASHER, 3/8" } Cap to gear carrier	4
640499	CARRIER, pulley drive gear, assembly	1
53453	CONE and ROLLERS, power take-off stub shaft	2
53720	CONE and ROLLERS, pulley shaft	2
51867	CUP, pulley shaft cone and rollers	2
53454	CUP, stub shaft cone and rollers	2
643185	GEAR and PINION SET (Matched Set) 21T-18T	1
640475	HOUSING, support, pulley, assembly	1
51405	BOLT, hex. hd., 3/8"-16 x 1" } Housing to carrier	6
5010	LOCKWASHER, 3/8" } Housing to carrier	6
640555	OIL SEAL, pulley drive	1
53961	PIN, straight, 3/8" x 1 7/8" (Stub shaft to sleeve)	1
5140	PLUG, drain, 1/2" pipe, sq. hd. (Pulley drive housing)	1
5349	PLUG, filler, 3/4" pipe, sq. hd.	1
640502	PULLEY, belt (cast iron)	1
640562	PULLEY, belt (paper) **(Use 640502)**	1
636569	NUT, hex., 3/4"-16 } Pulley to shaft	1
636570	WASHER, flat, 1/8" x 49/64" x 1 1/2" } Pulley to shaft	1
5397	PIN, cotter, 1/8" x 1 1/2" } Pulley to shaft	1
640561	RETAINER, oil, pulley hub	1
640480	SHAFT and SLEEVE, stub, power take-off, assembly	1
640556	SHIM, adjusting, bevel pinion, .003	As req'd.
640557	SHIM, adjusting, bevel pinion, .005	As req'd.
640558	SHIM, adjusting, bevel pinion, .010	As req'd.
640559	SHIM, adjusting, bevel pinion, .030	As req'd.
640448	SHIM, adjusting, bevel pinion, outer, .003	As req'd.
640449	SHIM, adjusting, bevel pinion, outer, .005	As req'd.
640450	SHIM, adjusting, bevel pinion, outer, .010	As req'd.
640451	SHIM, adjusting, bevel pinion, outer, .030	As req'd.
640465	SHIM, adjusting, pinion, .003	As req'd.
640466	SHIM, adjusting, pinion, .005	As req'd.
640467	SHIM, adjusting, pinion, .010	As req'd.
640468	SHIM, adjusting, pinion, .030	As req'd.

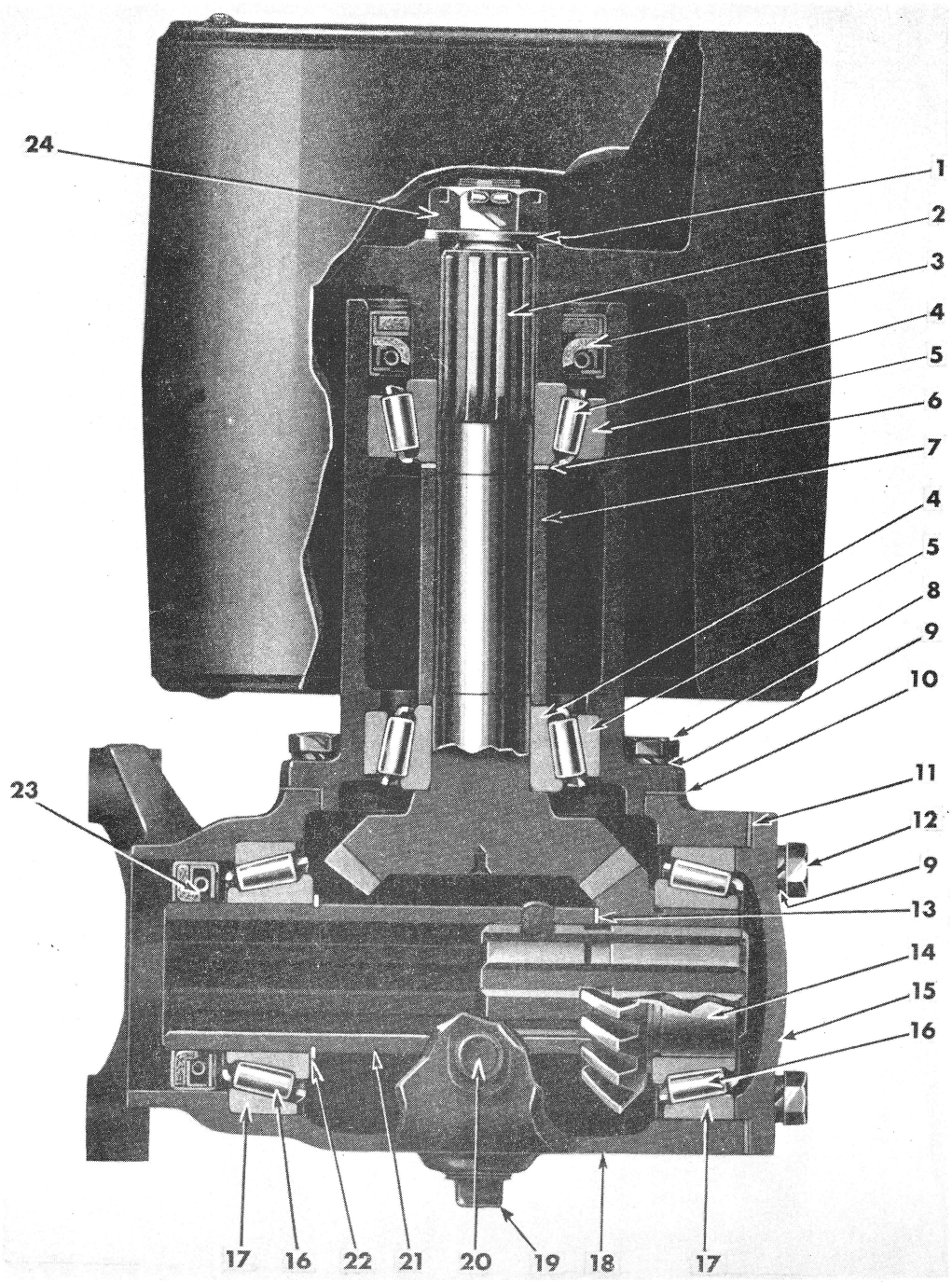

FIG. No. 60—PULLEY DRIVE

Ref. No.	Part No.	Description	Group No.	Ref. No.	Part No.	Description	Group No.
1	**636570**	Washer	35-06	13	**640465**	Shim	35-06
2	**643185**	Gear and Pinion Set	35-06	14	**643185**	Gear and Pinion Set	35-06
3	**640561**	Oil Seal	35-06	15	**640497**	Cap, Bearing	35-06
4	**53720**	Cone and Rollers	35-06	16	**53453**	Cone and Rollers	35-06
5	**51867**	Cup	35-06	17	**53454**	Cup	35-06
6	**640448**	Shim	35-06	18	**640499**	Carrier, gear	35-06
7	**640560**	Spacer	35-06	19	**5140**	Plug, drain	35-06
8	**51405**	Bolt	35-06	20	**A-870**	Breather	35-06
9	**5010**	Lockwasher	35-06	21	**640480**	Shaft and Sleeve	35-06
10	**640556**	Shim	35-06	22	**640718**	Snap Ring	35-06
11	**640469**	Shim	35-06	23	**640555**	Oil Seal	35-06
12	**6299**	Bolt	35-06	24	**636569**	Nut	35-06

Part No.	Description	Quan. Req'd. Per Assy.
	GROUP 35-06—PULLEY DRIVE (Continued)	
640469	SHIM, pulley drive pinion bearing, .003	As req'd.
640470	SHIM, pulley drive pinion bearing, .005	As req'd.
640471	SHIM, pulley drive pinion bearing, .010	As req'd.
640472	SHIM, pulley drive pinion bearing, .030	As req'd.
640718	SNAP RING, power take-off sleeve	1
640560	SPACER, pulley shaft bearing	1
	GROUP 35-07—FRONT END CONVERSION	
	For use with Monroe Hydraulic Implement Lift.—For trucks up to Serial No. 178936.	
646679	**Kit, Front End Conversion**	1
	Consists of:	
647500	2 ABSORBER, shock, front, assembly	
GM-109855	4 BOLT, hex. hd., 5/16"-24 x 2" (Axle bumper and spacer to frame)	
A-8291	3 CLIP, front spring, 2¾" wide	
A-8289	1 CLIP, front spring, 3 5/16" wide	
638513	1 NUT, crankshaft pulley	
646698	1 PULLEY, drive, fan and governor	
646671	2 SPACER, front axle bumper	
645548	2 SPRING, front, assembly	
	GROUP 35-08—GOVERNOR KIT	
645313	**Kit, Governor (Novi)**	1
	Consists of:	
640256	1 BELT, drive, governor	
645470	1 BRACKET, support, governor, assembly	
644094	1 BRACKET and PLATE, governor, assembly **(Use 645470)**	

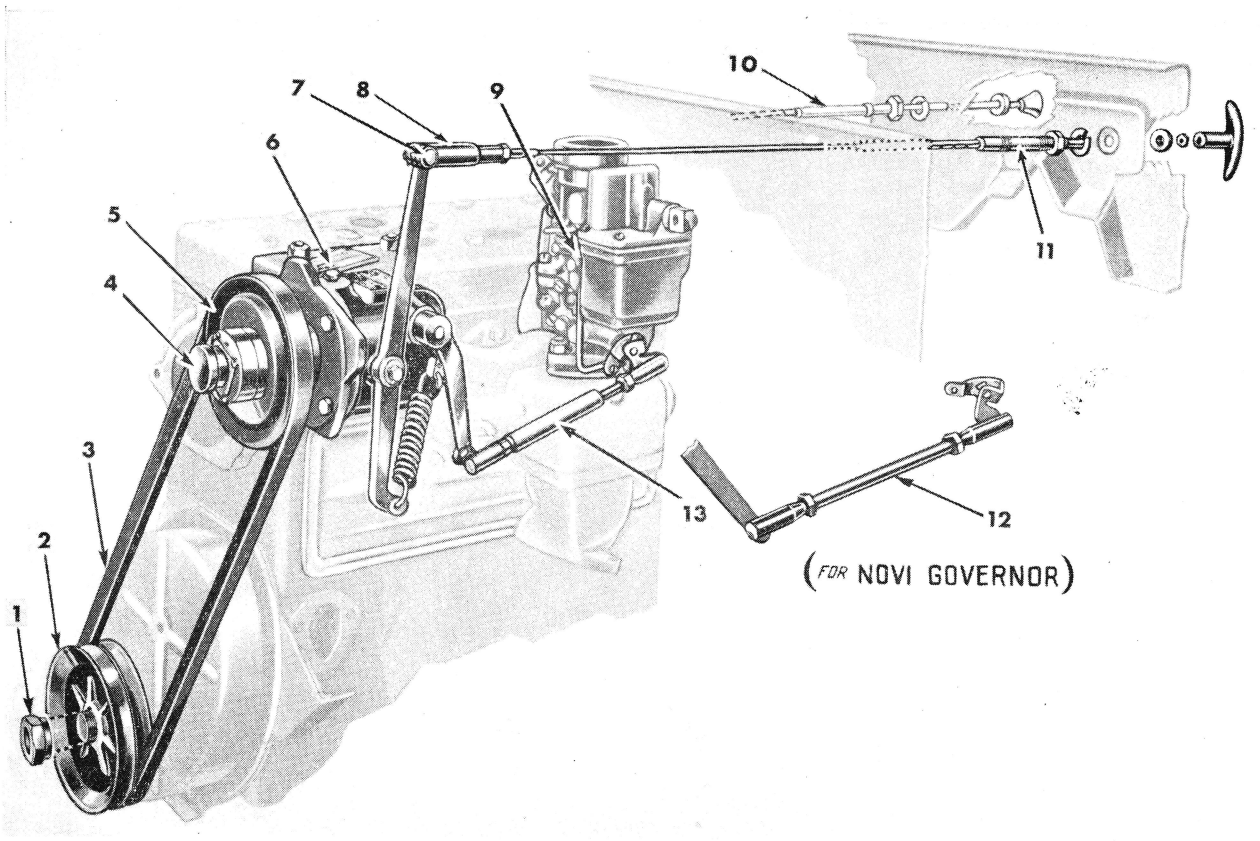

FIG. No. 61—GOVERNOR

Ref. No.	Part No.	Description	Group No.
1	**638513**	Nut, crankshaft	10-03
2	**646698**	Pulley, crankshaft	10-03
3	**640256**	Belt, governor	35-08
4	**643332**	Governor (Novi)	35-08
5	**644846**	Pulley, governor (Novi)	35-08
6	**645470**	Bracket, mounting	35-08
7	**377159**	Pin, clevis	35-08
8	**6556**	Yoke, adjusting	35-08
9	**647744**	Carburetor (For Novi Governor)	12-04
10	**640669**	Control, throttle	12-07
11	**645230**	Control, governor	35-08
12	**643333**	Rod, (For Novi Governor)	35-08
13	**645932**	Rod (For King Seely or Monarch Governor)	35-08

Part No.	Description	Quan. Req'd. Per Assy.
	GROUP 35-08—GOVERNOR KIT (Continued)	
6606	3 BOLT, hex. hd., 3/8"-24 x 1 1/8" (Governor to bracket)	
53510	3 WASHER, flat, 3/8" (Governor to bracket)	
5010	3 LOCKWASHER, 3/8" (Governor to bracket)	
52101	1 WASHER, flat, 3/8" (Governor support bracket to cylinder block)	
645230	1 CONTROL, governor, assembly **After Serial No. 128612**	
54051	1 LOCKWASHER, 1/2", int. (Governor control at instrument panel)	
5914	1 NUT, hex., 1/4"-28 (Governor control to lever)	
377159	1 PIN, clevis, 1/4" (Governor control to lever)	
5067	1 PIN, cotter, 1/16" x 1/2" (Governor control to lever)	
648876	1 DRAWING, installation	
643332	1 GOVERNOR Assembly **(Novi)**	
303466	1 GROMMET, dash (Rubber)	
643333	1 ROD, governor to carburetor, assembly	
5914	1 NUT, hex., 1/4"-28 (Governor to carburetor rod ball joint)	
52706	1 LOCKWASHER, 1/4" (Governor to carburetor rod ball joint)	
641505	1 TAG, caution, lubrication	
6556	1 YOKE, adjusting, 1/4"-28 (Governor control to lever)	
	Serviceable Components for King-Seeley Governor	
640254	**Governor Assembly (King-Seeley)**	1
	Consists of:	
641781	BASE, governor, assembly	1
641791	BEARING, ball, governor shaft	1
641800	BEARING, governor clutch	1
641814	BEARING, roller, governor throttle shaft	24
641821	BEARING, thrust, governor shaft	1
641936	BODY, governor, assembly	1
641808	BUSHING, governor shaft	1
641790	CLIP, governor shaft	4
641795	CLUTCH, drive, governor	1
641794	COVER, pulley hub	1
641809	DISC, thrust, governor shaft	1
641937	FORK, operating, shaft and lever, assembly	1
641820	GASKET, governor body	1
51483	SCREW, hex. hd., 1/4"-20 x 3/4" (Governor base to body)	4
51352	LOCKWASHER, 1/4" (Governor base to body)	4
641826	GASKET, governor bumper spring	1
641798	KNOB, control, governor clutch	1
641829	LEVER, manual control	1
641797	LOCK, governor clutch	1
641783	OIL SEAL, governor	1
641816	OIL SEAL, governor operating shaft	1
5433	PIN, cotter, 1/16" x 5/8"	1
641811	PIN, governor manual lever	1
641789	PIN, governor weight	2
641819	PLUG, governor body	1
53904	PLUG, oil drain, governor (1/4" pipe)	1
641827	PLUG, oil filler, governor	1
641828	PLUG, oil level, governor	1
641813	PLUG, operating shaft body	1
641792	PULLEY, governor, assembly	1
641802	RING, retaining, governor shaft bearing	1
641822	RISER, governor shaft	1
641803	SCREW, fil. hd., No. 8-32 x 3/4", special (Hub cover to base)	4
641825	SCREW, governor bumper	1
53903	NUT, 1/4"-28 (elastic stop)	1
641785	SHAFT and CARRIER, governor, assembly	1
641799	SLEEVE, governor shaft	1
641831	SPRING, governor	1
641824	SPRING, governor bumper	1
641796	SPRING, governor clutch	1
641830	WASHER, governor speed adjusting lever	1
641815	WASHER, retaining, governor bearing	4
641801	WASHER, retaining, governor shaft bearing	1
641788	WEIGHT, governor	2
	Components of Monarch Governor 640254 are as follows:	
116858	COLLAR, clutch, assembly	1
116861	CUP, oil, governor	1
116860	LEVER, clutch, assembly	1
116863	LEVER, pivot, governor	1
116859	PIN, pivot, clutch	1
116856	PLUG, expansion, pulley	1
307908	PLUG, pipe, slotted	1
116853	PULLEY Assembly	1
116854	RING, retaining, pulley bearing	1

Part No.	Description	Quan. Req'd. Per Assy.
	GROUP 35-08—GOVERNOR KIT (Continued)	
116864	SCREW, shoulder pivot, governor	1
116857	SPACER, pulley bearing	1
116862	SPRING, main, governor	1
116855	WASHER, retaining, pulley bearing	1
	Components of Novi Governor 643332 are as follows:	
644837	CLIP, clutch lever shaft	1
644845	LEVER, manual	1
644838	LOCKWASHER, cap screw	4
645891	OIL SEAL, front bearing	1
644841	PLUG, pipe	3
644846	PULLEY, drive, governor	1
644842	SCREW, body cap	4
644839	SPRING, governor, large	1
644844	SPRING, governor, small	1
644843	VENT, atmospheric	1
644840	WASHER, clutch lever	1
	Serviceable Components for Governor Control 645230:	
645950	BODY, governor control plunger, assembly	1
645951	CLIP, governor control plunger	1
645970	HANDLE and WIRE, governor control, assembly	1
645949	PLATE, face, governor control plunger, assembly	1
645968	WASHER, special, governor control	1
	Use with Governor 640254:	
640244	ROD, governor to carburetor, assembly **(Use 645932)**	1
	Consists of:	
640243	BAR, connecting	1
640581	JOINT, ball	1
640580	JOINT, ball, assembly	1
52847	NUT, hex., ¼"-28	2
A-7707	SPRING	1
640242	STEM and COLLAR Assembly	1
A-7699	STUD, connecting	1
A-7703	TUBE and BUSHING for spring **(Use 645932)**	1
645932	ROD, governor to carburetor, assembly	1
	Consists of same components as listed for 640244 except next two (2) items:	
645934	STEM and COLLAR Assembly	1
645933	TUBE and BUSHING Assembly	1
	Use with Governor 643332:	
643333	ROD, governor to carburetor, assembly	1
	Consists of:	
640581	JOINT, ball	1
643361	JOINT, ball, assembly	1
52847	NUT, hex., ¼"-28	2
643360	ROD, connecting	1
	GROUP 35-09—REAR PASSENGER SEAT	
	Model CJ-2A	
666373	**Kit, Rear Passenger Seat** (Olive Drab, Barcelona Red or Slate Gray)	1
	Consists of:	
663163	2 CATCH, seat leg lock, assembly	
53929	4 BOLT, hex. hd., ¼"-20 x ⅝" } Reat seat leg lock catch to floor	
52669	4 NUT, hex., ¼"-20 } Reat seat leg lock catch to floor	
52668	4 WASHER, flat, ¼" } Reat seat leg lock catch to floor	
53058	4 LOCKWASHER, ¼" } Reat seat leg lock catch to floor	
666374	1 SEAT, rear passenger, assembly (Trimmed and Complete)	
	Serviceable Components for Rear Passenger Seat 666374:	
663163	CATCH, rear seat leg lock, assembly	2
53929	BOLT, hex. hd., ¼"-20 x ⅝" } Rear seat leg lock catch to floor	4
52669	NUT, hex., ¼"-20 } Rear seat leg lock catch to floor	4
52668	WASHER, flat, ¼" } Rear seat leg lock catch to floor	4
53058	LOCKWASHER, ¼" } Rear seat leg lock catch to floor	4
666375	COVER, trim, rear seat back, assembly	1
52990	SCREW, ov. hd., No. 10 x ½" } Rear seat back trim cover to seat frame	7
53650	WASHER, finish, No. 10 } Rear seat back trim cover to seat frame	7
666383	COVER, trim, rear seat cushion, assembly **(Use 663232)**	1
52990	SCREW, ov. hd., No. 10 x ½" } Rear seat cushion trim cover to seat frame	5
53650	WASHER, finish, No. 10 } Rear seat cushion trim cover to seat frame	5
663232	CUSHION, rear seat, assembly (Trimmed and Complete)	1
666363	FRAME, rear passenger seat, assembly	1
663170	LOCK, rear seat leg	2
51765	RIVET, rd. hd., 3/16" x 1¼" (Seat leg lock to seat leg)	2
666382	SPRING, rear seat back, assembly	1
A-3983	SPRING, rear seat cushion, assembly	1

Part No.	Description	Quan. Req'd. Per Assy.
	GROUP 35-09A—REAR PASSENGER SEAT	
	Model CJ-3A	
670560	**Kit, Rear Passenger Seat** (Olive Drab, Barcelona Red or Slate Gray)	1
	Consists of:	
663163	2 CATCH, seat leg lock, assembly	
53929	4 BOLT, hex. hd., 1/4"-20 x 5/8" (Rear seat leg lock catch to floor)	
52669	4 NUT, hex., 1/4"-20 (Rear seat leg lock catch to floor)	
52668	4 WASHER, flat, 1/4" (Rear seat leg lock catch to floor)	
52667	4 LOCKWASHER, 1/4" (Rear seat leg lock catch to floor)	
670561	1 SEAT, rear passenger, assembly (Trimmed and Complete)	
	Serviceable Components for Rear Passenger Seat 670561:	
671357	BACK, rear passenger seat, assembly (Olive Drab, Barcelona Red or Slate Gray)	1
663163	CATCH, rear seat leg lock, assembly	2
53929	BOLT, hex. hd., 1/4"-20 x 5/8" (Rear seat leg lock catch to floor)	4
52669	NUT, hex., 1/4"-20 (Rear seat leg lock catch to floor)	4
52668	WASHER, flat, 1/4" (Rear seat leg lock catch to floor)	4
52667	LOCKWASHER, 1/4" (Rear seat leg lock catch to floor)	4
671359	COVER, trim, rear passenger seat back, assembly	1
671351	COVER, trim, rear passenger seat cushion, assembly	1
52990	SCREW, ov. hd., No. 10 x 1/2" (Rear seat cushion and back to seat frame)	23
53650	WASHER, finish, No. 10 (Rear seat cushion and back to seat frame)	23
671349	CUSHION, rear passenger seat, assembly (Olive Drab or Barcelona Red)	1
670494	FRAME, rear passenger seat, assembly (Welding)	1
663170	LOCK, rear seat leg	2
605688	RING, retaining, trim	As req'd.
666382	SPRING, rear seat back, assembly	1
670550	SPRING, rear seat cushion, assembly	1
	GROUP 35-10—REAR BODY TOP	
	Model CJ-2A	
	Installation of Rear Body Top Kit can be made only in conjunction with the Front Body Top Kit.	
663547	**Kit, Rear Body Top (Use 667826)**	1
	Consists of:	
663189	1 BOW, center, rear top	
663171	2 BOW, side, rear top	
663343	1 CURTAIN, side, rear top, left, assembly	
663344	1 CURTAIN, side, rear top, right, assembly	
663359	1 FLAP, opening, rear top back curtain, assembly	
663559	10 LOOP, footman **(Use 663808)**	
663808	10 LOOP, footman	
51537	4 SCREW, fl. hd., No. 10-24 x 1/2" (Footman loop to body rear panel)	
52651	4 NUT, hex., No. 10-24 (Footman loop to body rear panel)	
52221	4 LOCKWASHER, No. 10 (Footman loop to body rear panel)	
51537	4 SCREW, fl. hd., No. 10-24 x 1/2" (Footman loop to body side panel)	
52651	4 NUT, hex., No. 10-24 (Footman loop to body side panel)	
52221	4 LOCKWASHER, No. 10 (Footman loop to body side panel)	
51537	8 SCREW, fl. hd., No. 10-24 x 1/2" (Footman loop to tail gate)	
53937	8 NUT, acorn, No. 10-24 (Footman loop to tail gate)	
51537	4 SCREW, fl. hd., No. 10-24 x 1/2" (Footman loop to wheelhouse top panel)	
52651	4 NUT, hex., No. 10-24 (Footman loop to wheelhouse top panel)	
52221	4 LOCKWASHER, No. 10 (Footman loop to wheelhouse top panel)	
663207	2 STRAP, top roll, assembly	
663340	1 TOP, rear, assembly	
	Serviceable Components for Rear Body Top Kit 663547:	
663335	EYELET, curtain fastener	46
663511	FRAME, curtain window light	4
53946	RIVET, ov. hd., 1/8" x 7/16", split (Frame to curtains)	42
663512	LIGHT, curtain window **(Use 667055)**	2
667055	LIGHT, curtain window	2
663596	STUD and EYELET, double turn button	11
663595	STUD and EYELET, single turn button	20
663336	WASHER, flat, 21/32" (Used on top and curtains)	54
	GROUP 35-10A—REAR BODY TOP (Slate Gray)—Model CJ-2A (After Serial No. 136546)	
667826	**Kit, Rear Body Top**	1
	Consists of:	
663189	1 BOW, center, rear top	
667859	1 BOW, side, rear top, left	
667860	1 BOW, side, rear top, right	
667837	1 CURTAIN, side, rear top, left, assembly	
667838	1 CURTAIN, side, rear top, right, assembly	
663559	10 LOOP, footman **(Use 663808)**	
663808	10 LOOP, footman	

Part No.	Description	Quan. Req'd. Per Assy.
	GROUP 35-10A—REAR BODY TOP (Slate Gray)—Model CJ-2A (After Serial No. 136546) (Continued)	
51537	4 SCREW, fl. hd., No. 10-24 x ½" } Footman loop to body rear panel	
52651	4 NUT, hex., No. 10-24	
52221	4 LOCKWASHER, No. 10	
51537	4 SCREW, fl. hd., No. 10-24 x ½" } Footman loop to body side panel	
52651	4 NUT, hex., No. 10-24	
52221	4 LOCKWASHER, No. 10	
51537	8 SCREW, fl. hd., No. 10-24 x ½" } Footman loop to tail gate	
53937	8 NUT, acorn, No. 10-24	
51537	4 SCREW, fl. hd., No. 10-24 x ½" } Footman loop to wheelhouse top panel	
52651	4 NUT, hex., No. 10-24	
52221	4 LOCKWASHER, No. 10	
667851	2 RAIL, quarter, rear top bow	
667827	2 STRAP, top roll, assembly	
667831	1 TOP, rear, assembly	
	Serviceable Components for Rear Body Top Kit 667826:	
663335	EYELET, for rear curtain fastener	6
663335	EYELET, for side curtain fastener	14
668005	FLAP, rear top back curtain, assembly	1
663511	FRAME, curtain window light	4
53946	RIVET, ov. hd., ⅛" x 7/16", split (Frame to curtains)	28
667055	LIGHT, curtain window	2
667865	MATERIAL, duck, 36" wide, for rear top (Slate Gray)	As req'd.
667851	RAIL, quarter, rear top bow (⅜" O.D. x 30¾" long)	1
667846	STRAP and BUCKLE, rear top back curtain, assembly	2
667846	STRAP and BUCKLE, rear top side curtain	4
663596	STUD and EYELET, double turn, rear curtain fastener	11
663595	STUD and EYELET, single turn fastener	8
663595	STUD and EYELET, single turn, rear curtain fastener	12
663597	WASHER, fastener	8
663597	WASHER, for back curtain fastener	23
663336	WASHER, for rear curtain fastener eyelet	6
663336	WASHER, for side curtain fastener eyelet	14
	GROUP 35-10B—REAR BODY TOP (Slate Gray)—Model CJ-3A	
671619	**Kit, Rear Body Top, Complete (Zipper Type Top)**	1
	Consists of:	
663189	1 BOW, center, rear top	
667859	1 BOW, side, rear top, left	
667860	1 BOW, side, rear top, right	
671625	1 CURTAIN, side, rear top, left, assembly	
671626	1 CURTAIN, side, rear top, right, assembly	
663808	10 LOOP, footman	
51537	20 SCREW, fl. hd., No. 10-24 x ½" } Footman loop to body panels and tail gate	
52651	20 NUT, hex., No. 10-24	
52221	12 LOCKWASHER, No. 10	
670956	2 RAIL, quarter, rear top bow	
667827	2 STRAP, top roll, assembly	
671620	1 TOP, rear, assembly	
	Serviceable Components for Rear Body Top Kit 671619:	
672129	CURTAIN, back, rear top, assembly	1
663335	EYELET, curtain fastener	18
666314	EYELET, curtain fastener	2
663596	FASTENER, curtain, double, turn button, stud base	11
666312	FASTENER, curtain, single, turn button, stud base	2
663511	FRAME, curtain window light	4
53946	RIVET, ov. hd., ⅛" x 7/16", split (Curtain window light and frame to curtain)	28
667055	LIGHT, curtain window	2
671631	STRAP, top, assembly	6
667827	STRAP, top roll, assembly	2
663595	STUD and EYELET, curtain fastener	18
663336	WASHER, curtain fastener	18
663597	WASHER, curtain fastener	29
670568	ZIPPER, 63" long	1
	GROUP 35-11—BODY STEP	
	Parts Required to make installation of Steps on the Model CJ-2A prior to Serial No. 129806.	
646150	**Kit, Body Step**	1
	Consists of:	
666712	1 STEP, left, assembly	
666713	1 STEP, right, assembly	
53898	2 BOLT, hex. hd., 5/16"-24 x ⅞" } Step to body sides	
52626	2 NUT, hex., 5/16"-24	
53821	2 WASHER, flat, 5/16"	
53047	2 LOCKWASHER, 5/16"	

Part No.	Description	Quan. Req'd. Per Assy.
	GROUP 35-11—BODY STEP (Continued)	
52721	4 BOLT, hex. hd., 5/16"-24 x 5/8" (Step to floor pan)	
52626	6 NUT, hex., 5/16"-24 (Step to floor pan)	
53735	4 WASHER, flat, 5/16" (Step to floor pan)	
53047	6 LOCKWASHER, 5/16" (Step to floor pan)	
52721	3 BOLT, hex. hd., 5/16"-24 x 5/8" (Step to frame)	
52626	3 NUT, hex., 5/16"-24 (Step to frame)	
53047	3 LOCKWASHER, 5/16" (Step to frame)	
53068	6 BOLT, hex. hd., 5/16"-24 x 3/4" (Step to stringer)	
53735	6 WASHER, flat, 5/16" (Step to stringer)	
53047	6 LOCKWASHER, 5/16" (Step to stringer)	
A-3150	2 BOLT, welding, 5/16"-24 x 3/4"	
	1 INSTRUCTIONS, installation	
668725	2 NUT, speed, 5/16"	
668639	2 PLATE, stud, assembly	
668481	2 SPACER (For Body)	
	GROUP 35-12—CHAFF SCREEN AND BRUSH GUARD (For Bottom Mounted Radiator)	
663550	**Kit, Chaff Screen, Brush Guard and Lower Deflector**	1
	Consists of:	
663541	1 DEFLECTOR, radiator brush guard, assembly	
52841	2 SCREW, hex. hd., No. 12 x 1/2", tapping (Deflector to front cross tube)	
53382	4 BOLT, hex. hd., 1/4"-20 x 1/2" (Deflector to radiator brush guard)	
52217	4 NUT, hex., 1/4"-20 (Deflector to radiator brush guard)	
53058	4 LOCKWASHER, 1/4" (Deflector to radiator brush guard)	
663551	1 SCREEN, chaff, radiator, assembly	
	CHAFF SCREEN AND BRUSH GUARD DEFLECTOR (For Side Mounted Radiator) (After Serial No. .....)	
	Model CJ-3A	
673143	**Kit, Chaff Screen and Brush Guard Deflector**	1
	Consists of:	
673037	1 DEFLECTOR, radiator brush guard	
52841	2 SCREW, hex. hd., No. 12 x 1/2", tapping (Deflector to front cross tube)	
53382	4 BOLT, hex. hd., 1/4"-20 x 1/2" (Deflector to radiator brush guard)	
52669	4 NUT, hex., 1/4"-20 (Deflector to radiator brush guard)	
53058	4 LOCKWASHER, 1/4" (Deflector to radiator brush guard)	
663551	1 SCREEN, chaff, radiator, assembly	
	Serviceable Components for Chaff Screen, Brush Guard and Lower Deflector Kit 663550 and 673143:	
663542	BRACKET, radiator chaff screen	2
51692	RIVET, fl. hd., 5/32" x 3/8" (Bracket and spring to chaff screen)	4
663543	BRACKET, retaining, radiator chaff screen	2
51787	RIVET, fl. hd., 5/32" x 7/16" (Bracket and plate to chaff screen)	4
663544	PLATE, radiator chaff screen retaining bracket	2
663525	SEAL, radiator brush guard deflector	1
663545	SPRING, retaining, radiator chaff screen	2
	GROUP 35-12A—RADIATOR BRUSH GUARD DEFLECTOR KIT (For Bottom Mounted Radiator)	
663887	**Kit, Radiator Brush Guard Deflector**	1
	Consists of:	
663541	1 DEFLECTOR, radiator brush guard, assembly	
52841	2 SCREW, hex. hd., No. 12 x 1/2", tapping (Deflector to front cross tube)	
53382	4 BOLT, hex. hd., 1/4"-20 x 1/2" (Deflector to radiator brush guard)	
52217	4 NUT, hex., 1/4"-20 (Deflector to radiator brush guard)	
53058	4 LOCKWASHER, 1/4" (Deflector to radiator brush guard)	
	RADIATOR BRUSH GUARD DEFLECTOR (For Side Mounted Radiator) (After Serial No. .....)	
	Model CJ-3A	
673144	**Kit, Radiator Brush Guard Deflector**	1
	Consists of:	
673037	1 DEFLECTOR, radiator brush guard	
52841	2 SCREW, hex. hd., No. 12 x 1/2", tapping (Deflector to front cross tube)	
53382	4 BOLT, hex. hd., 1/4"-20 x 1/2" (Deflector to radiator brush guard)	
52669	4 NUT, hex., 1/4"-20 (Deflector to radiator brush guard)	
53058	4 LOCKWASHER, 1/4" (Deflector to radiator brush guard)	
	GROUP 35-13—FRONT BUMPER BAR WEIGHT	
640724	**Kit, Front Bumper Bar Weight**	1
	Consists of:	
640729	1 WEIGHT, front bumper bar	

Part No.	Description	Quan. Req'd. Per Assy.
	GROUP 35-13—FRONT BUMPER BAR WEIGHT (Continued)	
53833	4 BOLT, hex. hd., 3/8"-24 x 2 7/8" (Bumper weight to frame and front bumper)	
50922	2 NUT, hex., 3/8"-24	
52819	2 WASHER, flat, 3/8"	
642339	4 WASHER, flat, 3/8"	
53780	4 LOCKWASHER, 3/8"	
	GROUP 35-14—SPARE WHEEL CARRIER ON TAIL GATE	
670504	**Kit, Tail Gate Spare Wheel Carrier**	1
	Consists of:	
668848	1 DRAWING, installation	
668714	1 REINFORCEMENT, tail gate panel	
54421	4 BOLT, crg., 1/4"-20 x 1 1/8" (Reinforcement to tail gate panel)	
52669	4 NUT, sq., 1/4"-20	
52667	4 LOCKWASHER, 1/4"	
668715	4 SPACER, tail gate panel to tire carrier bracket	
GM-120915	2 BOLT, crg., 3/8"-16 x 1" (Tail gate to body side panel)	
GM-442827	2 NUT, huglock, 3/8"-16	
GM-126696	4 BOLT, crg., 3/8"-16 x 2 1/2" (Tire carrier support bracket to tail gate)	
53908	4 NUT, hex., 3/8"-16	
52708	4 LOCKWASHER, 3/8"	
	GROUP 35-15—PINTLE HOOK	
640532	**Kit, Pintle Hook**	1
	Consists of:	
A-6393	2 BOLT, eye, safety chain	
53753	2 NUT, hex., 1/2"-13 (Safety chain eyebolt to frame)	
5009	2 LOCKWASHER, 1/2"	
642896	1 DRAWING, installation, pintle hook	
A-593	1 HOOK, pintle	
54024	4 BOLT, hex. hd., 7/16"-20 x 2" (Pintle hook to frame)	
5939	4 NUT, hex., 7/16"-20	
52349	4 LOCKWASHER, 7/16"	
A-552	1 REINFORCEMENT, pintle hook frame	
642853	4 SPACER, pintle hook	
642895	2 SPACER, safety chain eyebolt	
	GROUP 35-17—FRONT BODY TOP—Model CJ-2A	
663546	**Kit, Front Body Top (Up to Serial No. 114949) (Use 667888)**	1
664987	**Kit, Front Body Top (After Serial No. 114949, Up to Serial No. 136546) (Use 667888)**	1
	Consists of:	
671102	1 BAR, spacer, front top center bow **(After Serial No. 220627)**	
663192	1 BOW, center, front top, assembly	
663446	1 BOW, side, front top, left, assembly	
663447	1 BOW, side, front top, right, assembly	
656206	1 BRACKET, support, door hinge, upper, left, assembly	
656207	1 BRACKET, support, door hinge, upper, right, assembly	
663326	1 CURTAIN, back, front top, assembly	
663459	1 DOOR, left, assembly **(Up to Serial No. 114949)**	
664756	1 DOOR, left, assembly **(After Serial No. 114949)**	
663460	1 DOOR, right, assembly **(Up to Serial No. 114949)**	
664757	1 DOOR, right, assembly **(After Serial No. 114949)**	
663559	8 LOOP, footman **(Use 663808)**	
51537	8 SCREW, fl. hd., No. 10-24 x 1/2" (Footman loop to body side panel, left)	
52651	8 NUT, hex., No. 10-24	
52221	8 LOCKWASHER, No. 10	
51537	6 SCREW, fl. hd., No. 10-24 x 1/2" (Footman loop to wheelhouse top panel, left)	
52651	6 NUT, hex., No. 10-24	
52221	6 LOCKWASHER, No. 10	
51537	2 SCREW, fl. hd., No. 10-24 x 1/2" (Footman loop to wheelhouse top panel, right)	
52651	2 NUT, hex., No. 10-24	
52221	2 LOCKWASHER, No. 10	
663437	1 RAIL, top, left, assembly	
663438	1 RAIL, top, right, assembly	
52666	2 BOLT, hex. hd., 1/4"-20 x 3/4" (Top rail to top bow, front side)	
52669	2 NUT, hex., 1/4"-20	
52668	2 WASHER, plain, 1/4"	
53058	2 LOCKWASHER, 1/4"	
663656	1 ROD, side curtain, front, left, assembly **(Up to Serial No. 114949)**	
664988	1 ROD, side, curtain, front, left, assembly **(After Serial No. 114949)**	
663657	1 ROD, side curtain, front, right, assembly **(Up to Serial No. 114949)**	
664989	1 ROD, side curtain, front, right, assembly **(After Serial No. 114949)**	
52666	4 BOLT, hex. hd., 1/4"-20 x 3/4" (Side curtain front rod to body side panel)	
52669	4 NUT, hex., 1/4"-20	
53058	4 LOCKWASHER, 1/4"	
663449	1 SOCKET, door lower hinge, left, assembly **(Up to Serial No. 114949)**	

Part No.	Description	Quan. Req'd. Per Assy.

GROUP 35-17—FRONT BODY TYPE—Model CJ-2A (Continued)

664722	1 SOCKET, door lower hinge, left, assembly **(After Serial No. 114949)**	
663450	1 SOCKET, door lower hinge, right, assembly **(Up to Serial No. 114949)**	
664723	1 SOCKET, door lower hinge, right, assembly **(After Serial No. 114949)**	
53700	8 SCREW, rd. hd., No. 8 x ½", tapping (Lower door hinge socket to cowl side panel)	
663203	1 STRAP, top bow storage, assembly	
663207	2 STRAP, top roll, assembly	
663280	1 TOP, front, assembly	
663196	1 TUBE, spacer, front top center bow **(Use 671102)**	
	Serviceable Components for Front Body Top Kits:	
663455	BRACKET, support, door hinge, upper, inner half, left, assembly	1
663456	BRACKET, support, door hinge, upper, inner half, right, assembly	1
663453	BRACKET, support, door hinge, upper, outer half, left, assembly	1
663454	BRACKET, support, door hinge, upper, outer half, right, assembly	1
663335	EYELET, curtain fastener	68
A-3052	FASTENER, curtain, male, flush type	2
663511	FRAME, curtain window, rear	2
53946	RIVET, ov. hd., ⅛" x 7/16", split (Curtain window frame)	14
663509	FRAME, door window, left	2
663508	FRAME, door window, right	2
53946	RIVET, ov. hd., ⅛" x 7/16", split (Door window frame)	38
663663	HANDLE and PIN, door, assembly	2
663512	LIGHT, curtain window, rear **(Use 667055)**	2
667055	LIGHT, curtain window, rear	2
663510	LIGHT, door window **(Use 667054)**	2
667054	LIGHT, door window	2
663442	ROD, side curtain, front, left, assembly	1
663443	ROD, side curtain, front, right, assembly	1
A-3051	SOCKET, curtain fastener	2
663596	STUD and EYELET, double turn button	17
663595	STUD and EYELET, single turn button	32
663336	WASHER, eyelet	66
663597	WASHER, eyelet	49
A-3053	WASHER, eyelet	4
666460	ZIPPER, front door (For hand signal opening) **(Use 668717)**	2
668717	ZIPPER, 8" long, for hand opening	2

GROUP 35-17A—FRONT BODY TOP (Slate Gray)—Model CJ-2A (After Serial No. 136546)

667888	**Kit, Front Body Top**	1
	Consists of:	
671102	1 BAR, spacer, front top center bow **(After Serial No. 220627)**	
663192	1 BOW, center, front top, assembly	
667997	1 BOW, side, front top, left, assembly	
667998	1 BOW, side, front top, right, assembly	
656206	1 BRACKET, support, door hinge, upper, left, assembly	
656207	1 BRACKET, support, door hinge, upper, right, assembly	
667917	1 DOOR, left, assembly	
667918	1 DOOR, right, assembly	
668005	1 FLAP, back curtain, assembly	
663559	8 LOOP, footman **(Use 663808)**	
663808	8 LOOP, footman	
51537	8 SCREW, fl. hd., No. 10-24 x ½"	Footman loop to body side panel, left
52651	8 NUT, hex., No. 10-24	
52221	8 LOCKWASHER, No. 10	
51537	6 SCREW, fl. hd., No. 10-24 x ½"	Footman loop to wheelhouse top panel, left
52651	6 NUT, hex., No. 10-24	
52221	6 LOCKWASHER, No. 10	
51537	2 SCREW, fl. hd., No. 10-24 x ½"	Footman loop to wheelhouse top panel, right
52651	2 NUT, hex., No. 10-24	
52221	2 LOCKWASHER, No. 10	
663437	1 RAIL, top, left, assembly	
663438	1 RAIL, top, right, assembly	
52666	2 BOLT, hex. hd., ¼"-20 x ¾"	Top rail to top bow, front side
52669	2 NUT, hex., ¼"-20	
52668	2 WASHER, plain, ¼"	
53058	2 LOCKWASHER, ¼"	
663444	1 ROD, side curtain, front, left, assembly	
663445	1 ROD, side curtain, front, right, assembly	
52666	4 BOLT, hex. hd., ¼"-20 x ¾"	Side curtain front rod to body side panel
52669	4 NUT, hex., ¼"-20	
53058	4 LOCKWASHER, ¼"	
664722	1 SOCKET, door lower hinge, left, assembly	
664723	1 SOCKET, door lower hinge, right, assembly	
53700	8 SCREW, rd. hd., No. 8 x ½", tapping (Lower door hinge socket to cowl side panel)	
667889	1 STRAP, top bow storage, assembly	
667827	1 STRAP, top roll, assembly	

Part No.	Description	Quan. Req'd. Per Assy.
	GROUP 35-17A—FRONT BODY TOP (Slate Gray)—Model CJ-2A (After Serial No. 136546) (Continued)	
667891	1 TOP, front, assembly	
663196	1 TUBE, spacer, front top center bow **(Use 671102)**	
	Serviceable Components for Front Body Top Kit 667888:	
663455	BRACKET, support, door hinge, upper, inner half, left, assembly	1
663456	BRACKET, support, door hinge, upper, inner half, right, assembly	1
663453	BRACKET, support, door hinge, upper, outer half, left, assembly	1
663454	BRACKET, support, door hinge, upper, outer half, right, assembly	1
53037	NUT, hex., 5/16"-18 {Door hinge upper support bracket, inner to outer halves}	2
53047	LOCKWASHER, 5/16"	2
664727	DOOR, front, left, assembly (Welding)	1
664728	DOOR, front, right, assembly (Welding)	1
663335	EYELET, curtain fastener	31
A-3052	FASTENER, curtain, male, flush type	4
668005	FLAP, back curtain, assembly	1
663511	FRAME, curtain window, rear	2
53946	RIVET, ov. hd., 1/8" x 7/16", split (Curtain window frame)	14
663509	FRAME, door window, left for left door, right for right door	2
663508	FRAME, door window, right for left door, left for right door	2
53946	RIVET, ov. hd., 1/8" x 7/16", split (Door window frame)	38
663663	HANDLE and PIN, door, assembly	2
663512	LIGHT, curtain window, rear **(Use 667055)**	2
667055	LIGHT, curtain window, rear	2
663510	LIGHT, door window **(Use 667054)**	2
667054	LIGHT, door window	2
667865	MATERIAL, duck, 36" wide (Slate Gray)	As req'd.
663612	PLATE, rub (Front door handle)	2
663444	ROD, side curtain, front, left, assembly	1
663445	ROD, side curtain, front, right, assembly	1
667846	STRAP and BUCKLE, front top back curtain, assembly	9
663596	STUD and EYELET, double turn curtain fastener	11
663595	STUD and EYELET, single turn curtain fastener	6
A-3053	WASHER, curtain fastener	4
663336	WASHER, curtain fastener eyelet	31
663597	WASHER, curtain fastener stud	17
668717	ZIPPER, 8" long, for hand opening	1
668114	ZIPPER, 24" long, front body top	2
668115	ZIPPER, 63" long, front body top	1
	GROUP 35-17B—FRONT BODY TOP (Slate Gray)—Model CJ-3A	
671595	**Kit, Front Body Top, Complete (Zipper Type Top)**	1
	Consists of:	
670938	1 BAR, spacer, front top center bow	
663192	1 BOW, center, front top, assembly	
667997	1 BOW, side, front top, left, assembly	
667998	1 BOW, side, front top, right, assembly	
671615	1 DOOR, left, assembly	
671616	1 DOOR, right, assembly	
668005	1 FLAP and EXTENSION, front top back curtain, assembly	
663808	4 LOOP, footman	
51537	8 SCREW, fl. hd., No. 10-24 x 1/2" {Footman loops to body}	
52651	8 NUT, hex., No. 10-24	
52221	8 LOCKWASHER, No. 10	
671023	1 RAIL, top, left, assembly	
671024	1 RAIL, top, right, assembly	
52666	2 BOLT, hex. hd., 1/4"-20 x 3/4" {Top rail to top bow, front side}	
52669	2 NUT, hex., 1/4"-20	
52668	2 WASHER, plain, 1/4"	
53058	2 LOCKWASHER, 1/4"	
50922	4 NUT, hex., 3/8"-24 {Top rail to windshield}	
52046	2 LOCKWASHER, 3/8"	
663444	1 ROD, side curtain, front, left, assembly	
663445	1 ROD, side curtain, front, right, assembly	
52666	4 BOLT, hex. hd., 1/4"-20 x 3/4" {Side curtain front rod to body side panel}	
52669	4 NUT, hex., 1/4"-20	
53058	4 LOCKWASHER, 1/4"	
664722	1 SOCKET, door lower hinge, left, assembly	
664723	1 SOCKET, door lower hinge, right, assembly	
53700	8 SCREW, rd. hd., No. 8 x 1/2", tapping (Lower door hinge socket to cowl side panel)	
667827	2 STRAP, top roll, assembly	
671596	1 TOP, front, assembly	
	Serviceable Components for Front Body Top Kit 671595:	
666311	BUTTON, curtain fastener (Use with 666313 Socket) **(Use 672002)**	2
672002	BUTTON, curtain fastener, male half	2
671617	CURTAIN, side, door, left, assembly **(Use 671615)**	1
671618	CURTAIN, side, door, right, assembly **(Use 671616)**	1

Part No.	Description	Quan. Req'd. Per Assy.
	GROUP 35-17B—FRONT BODY TOP (Slate Gray)—Model CJ-3A (Continued)	
670963	DOOR, left, assembly (Welding)	1
670964	DOOR, right, assembly (Welding)	1
663335	EYELET, curtain fastener (Use with 663336 Washer)	6
663511	FRAME, curtain window, rear	2
53946	RIVET, ov. hd., 1/8" x 7/16", split (Curtain window frame)	14
663509	FRAME, door window, left for left door, right for right door	2
663508	FRAME, door window, right for left door, left for right door	2
53946	RIVET, ov. hd., 1/8" x 7/16", split (Door window frame)	38
663613	HANDLE, door	2
663663	HANDLE and PIN, door, assembly	2
667055	LIGHT, curtain window, rear	1
667054	LIGHT, door window	2
663614	PLATE, rub (Front door handle)	2
671705	RETAINER and UPPER DOOR HINGE BRACKET, door curtain, left, assembly	1
671706	RETAINER and UPPER DOOR HINGE BRACKET, door curtain, right, assembly	1
666313	SOCKET, curtain fastener (Use with 666311 Button)	2
667827	STRAP, top roll, assembly	2
671631	STRAP and BUCKLE, 21½" long	9
663596	STUD and EYELET, double turn curtain fastener	11
663595	STUD and EYELET, single turn curtain fastener	6
663597	WASHER, curtain fastener (Use with 663595 Stud and Eyelet)	6
663597	WASHER, curtain fastener (Use with 663596 Stud and Eyelet)	11
663336	WASHER, curtain fastener eyelet (Use with 663335 Eyelet)	6
670590	ZIPPER, 8" long, door hand opening	1
671889	ZIPPER, 24" long, left side (Half of this zipper sewn to front top assembly)	1
671890	ZIPPER, 24" long, right side (Half of this zipper sewn to front top assembly)	1
670568	ZIPPER, 63" long (Half of this zipper sewn to front top assembly)	1
	GROUP 35-18—HEATER (Harrison)	
669747	**Kit, Heater (Use 94046)**	1
94046	**Kit, Heater**	1
	Consists of:	
669733	1 BRACKET, support, hose	
53238	1 SCREW, rd. hd., No. 10-32 x 5/8" } Hose support bracket to splash apron	
53061	1 NUT, hex., No. 10-32 } Hose support bracket to splash apron	
53381	1 LOCKWASHER, No. 10 } Hose support bracket to splash apron	
669901	1 CABLE, heater switch to heater	
671792	1 CABLE, jumper, ignition switch to heater switch	
669924	4 CLAMP, hose, 11/32"	
635981	1 CONNECTOR, slip (2 wire)	
671791	1 DRAWING, installation	
669313	1 HEATER Assembly	
53068	1 BOLT, hex. hd., 5/16"-24 x 3/4" } Heater to dash panel	
52850	3 NUT, hex., 5/16"-18 } Heater to dash panel	
53735	1 WASHER, flat, 5/16" } Heater to dash panel	
52558	3 LOCKWASHER, 5/16" } Heater to dash panel	
669732	1 HOSE, heater (30" long)	
669731	1 HOSE, heater (34½" long)	
669909	1 NIPPLE, heater	
669737	1 SWITCH, heater	
669925	1 VALVE, shut-off	
669722	2 WASHER, rubber, 5/8" I.D., 1¾" O.D.	
	GROUP 35-19—FRONT PASSENGER SEAT—Model CJ-2A	
663500	**Kit, Front Passenger Seat** (Olive Drab, Barcelona Red or Slate Gray)	1
	Consists of:	
663484	1 PIVOT, front passenger seat hinge, left	
663485	1 PIVOT, front passenger seat hinge, right	
53931	2 BOLT, hex. hd., 5/16"-18 x 7/8" } Front passenger seat pivots to floor	
52850	2 NUT, hex., 5/16"-18 } Front passenger seat pivots to floor	
53821	2 WASHER, flat, 5/16" } Front passenger seat pivots to floor	
53047	2 LOCKWASHER, 5/16" } Front passenger seat pivots to floor	
663616	1 SEAT, front passenger, assembly (Trimmed and Complete)	
	Serviceable Components for Front Passenger Seat 663616:	
663609	CLIP, retaining, front seat pan	2
663617	COVER, trim, front passenger seat back, assembly	1
52990	SCREW, ov. hd., No. 10 x ½" } Front passenger seat back trim cover to frame	12
53650	WASHER, finish, No. 10 (Int'ch'ble with 53732) } Front passenger seat back trim cover to frame	12
53732	WASHER, finish, No. 10 (Int'ch'ble with 53650) } Front passenger seat back trim cover to frame	12
663621	CUSHION, front passenger seat, assembly	1
663605	FRAME, front passenger seat, assembly	1
A-12085	NUT, welding, 5/16"-24 (Int'ch'ble with 671291)	1
671291	NUT, welding, 5/16"-24 (Int'ch'ble with A-12085)	1
663607	PAN, front passenger seat, assembly	1
663686	SPRING, front passenger seat back, assembly	1

Part No.	Description	Quan. Req'd. Per Assy.
	GROUP 35-19A—FRONT PASSENGER SEAT—Model CJ-3A	
670426	**Kit, Front Passenger Seat** (Olive Drab or Barcelona Red)	1
	Consists of:	
663484	1 PIVOT, front passenger seat hinge, left	
663485	1 PIVOT, front passenger seat hinge, right	
53931	2 BOLT, hex. hd., 5/16"-18 x 7/8" } Front passenger seat pivots to floor	
52850	2 NUT, hex., 5/16"-18	
53821	2 WASHER, flat, 5/16"	
52558	2 LOCKWASHER, 5/16"	
670427	1 SEAT, front passenger, assembly (Trimmed and Complete)	
	Serviceable Components for Front Passenger Seat 670427:	
671374	COVER, trim, front passenger seat back, assembly	1
52990	SCREW, ov. hd., No. 10 x 1/2" } Front passenger seat back trim cover to frame	12
53650	WASHER, finish, No. 10	12
671376	CUSHION, front passenger seat, assembly	1
52721	BOLT, hex. hd., 5/16"-24 x 5/8" } Seat cushion to seat frame	2
52558	LOCKWASHER, 5/16"	2
670366	FRAME, front passenger seat, assembly (Welding)	1
670371	LEG, front passenger seat	1
663607	PAN, front passenger seat, assembly	1
663472	PIN, pivot, front passenger seat	2
663484	PIVOT, front passenger seat hinge, left	1
663485	PIVOT, front passenger seat hinge, right	1
53931	BOLT, hex. hd., 5/16"-18 x 7/8" } Front passenger seat pivots to floor	2
52850	NUT, hex., 5/16"-18	2
53821	WASHER, flat, 5/16"	2
52558	LOCKWASHER, 5/16"	2
605688	RING, retaining, trim	8
663686	SPRING, front passenger seat back, assembly	1
670425	SPRING, front passenger seat cushion, assembly	1
	GROUP 35-20—STARTING CRANK	
646022	**Kit, Starting Crank and Crank Nut**	1
	Consists of:	
640751	1 CRANK, starting, assembly	
387633	1 NUT, starting crank, assembly	
	Serviceable Components for Starting Crank Assembly 640751:	
640752	CRANK, starting, handle end	1
640753	CRANK, starting, jaw end	1
	GROUP 35-21—CAPSTAN WINCH	
647057	**Kit, Capstan Winch**	1
	Consists of:	
A-5113	1 BAG, spare parts	
640812	1 BRACKET, rope roller, left, assembly	
640816	1 BRACKET, rope roller, right, assembly	
53141	4 BOLT, hex. hd., 3/8"-24 x 1 1/4" } Bracket to bumper	
50922	4 NUT, hex., 3/8"-24	
53032	4 WASHER, flat, 3/8"	
52046	4 LOCKWASHER, 3/8"	
A-10284	1 BRACKET, support, winch drive, assembly	
53038	3 BOLT, hex. hd., 3/8"-24 x 7/8" } Winch drive support bracket to engine	
52046	3 LOCKWASHER, 3/8"	
647653	1 DRAWING, installation	
A-971	1 HANDLE, shift, capstan winch	
640822	1 HUB, winch drive shaft, assembly	
640805	1 INSTRUCTIONS, installation	
53356	2 KEY, Woodruff, No. 7	
640898	1 LUBRICANT, capstan winch drive	
50968	1 PIN, cotter, 3/32" x 3/4"	
640808	1 PLATE, mounting, assembly	
640868	1 PULLEY, drive, fan and governor, assembly	
645862	1 ROD, shift, capstan winch	
640821	1 ROLLER, capstan winch rope	
53355	2 SCREW, set, 5/16"-24 x 1/4", cup point	
640818	1 SHAFT, drive, capstan winch, assembly	
A-9214	1 SHAFT, spline, capstan winch	
A-9194	3 SPACER, winch drive	
640826	1 TAG, caution, lubrication	
640807	1 WINCH, capstan, assembly	
51986	8 SCREW, fl. hd., 1/4"-20 x 7/8" } Capstan winch to mounting plate	
52217	8 NUT, hex., 1/4"-20	
53058	8 LOCKWASHER, 1/4"	
	Serviceable Components for Capstan Winch 640807:	
635838	BALL, poppet	1

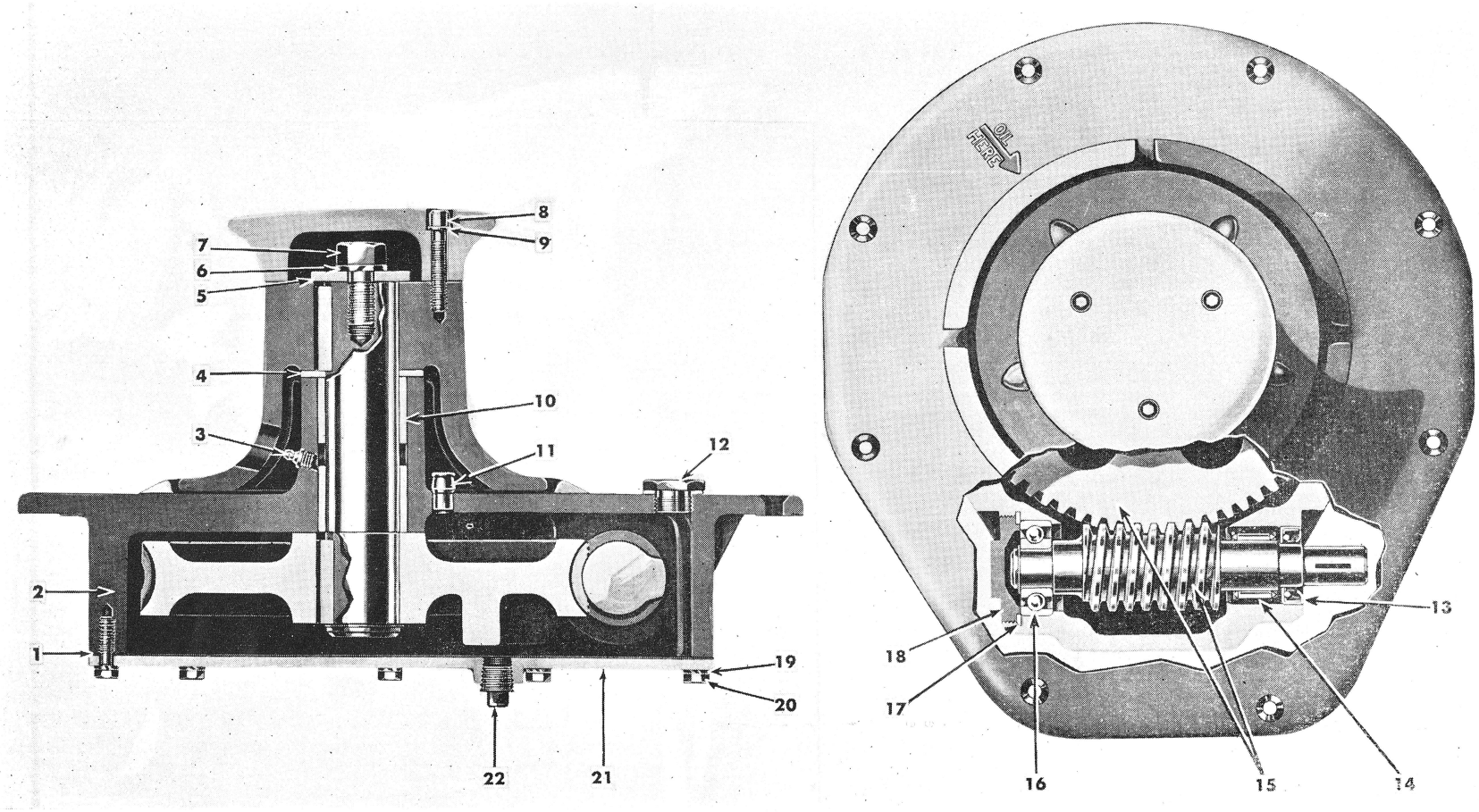

FIG. No. 62—CAPSTAN WINCH, SECTIONAL VIEW

Ref. No.	Part No.	Description	Group No.	Ref. No.	Part No.	Description	Group No.
1	**640846**	Gasket	35-21	12	**640854**	Plug, Filler	35-21
2	**640840**	Box, gear	35-21	13	**640860**	Oil Seal	35-21
3	**640863**	Fitting, Lubricating	35-21	14	**640861**	Bearing	35-21
4	**640850**	Washer, Thrust	35-21	15	**640843**	Worm and Gear Set	35-21
5	**640849**	Washer	35-21	16	**640859**	Bearing	35-21
6	**5009**	Lockwasher	35-21	17	**640857**	Gasket, Retainer Cap	35-21
7	**53446**	Screw	35-21	18	**640858**	Cap, Retainer	35-21
8	**53863**	Screw	35-21	19	**52706**	Lockwasher	35-21
9	**N.P.N.**	Washer	00-00	20	**51483**	Screw	35-21
10	**640851**	Bushing, Upper	35-21	21	**640845**	Cover, Gear Box	35-21
11	**640862**	Cover, Oil Hole	35-21	22	**5138**	Plug, Drain	35-21

Part No.	Description	Quan. Req'd. Per Assy.
	GROUP 35-21—CAPSTAN WINCH (Continued)	
640859	BEARING, ball, capstan drive worm	1
640861	BEARING, needle, capstan drive worm	1
640815	BEARING, sleeve, winch rope roller	2
640814	BEARING. thrust, winch rope roller	2
640840	BOX, gear, capstan drive	1
A-9210	BRACKET and BUSHING, support, winch drive, assembly	1
640852	BUSHING, capstan shaft, lower	1
640851	BUSHING, capstan shaft, upper	1
A-9208	BUSHING, winch shaft	2
640842	CAP, capstan winch	1
53863	SCREW, socket hd., 1/4"-20 x 1 3/4" (End cap to capstan)	3
640858	CAP, retainer, capstan drive worm ball bearing	1
640841	CAPSTAN, 3 1/2" dia.	1
640862	COVER, oil hole	1
640863	FITTING, lubricating	1
392909	FITTING, lubricating, 1/8" pipe thread (Int'ch'ble with 646906)	1
646906	FITTING, lubricating (Int'ch'ble with 392909)	1
638500	FITTING, lubricating, 90° (Int'ch'ble with GM-191350)	1
GM-191350	FITTING, lubricating, 90° (Int'ch'ble with 638500)	1
A-9207	FORK, shift, capstan winch	1
50802	NUT, hex., 5/16"-24 } Shift fork to bracket	1
53029	LOCKWASHER, 5/16" } Shift fork to bracket	1
640848	GASKET, capstan cap	1
640857	GASKET, capstan drive worm bearing retainer cap	1
640853	GASKET, capstan filler plug	1
640846	GASKET, capstan winch cover plate	1
640819	JOINT, universal, winch drive, front, assembly	1
A-9201	PIN, straight (Front universal joint to shaft)	1
A-9158	JOINT, universal, winch drive, rear, assembly	1
5134	PIN, cotter, 1/8" x 1 3/4" (Rear universal joint to shaft)	1
640847	KEY, Par, worm gear shaft to capstan	1
640860	OIL SEAL, capstan drive worm	1
640845	PLATE, gear box cover, assembly	1
51483	SCREW, hex. hd., 1/4"-20 x 3/4" } Cover plate to capstan gear box	1
52706	LOCKWASHER, 1/4" } Cover plate to capstan gear box	1
5138	PLUG, drain, capstan gear box	1
640854	PLUG, filler, capstan gear box	1
640855	RING, retaining, low speed shaft	1
640856	RING, retaining, worm and gear set	1
641236	SCREW, headless, No. 10-24 x 5/16", set	1
640820	SHAFT, drive, capstan winch	1
640844	SHAFT, low speed, worm gear	1
53446	SCREW, hex. hd., 1/2"-13 x 1" } Worm gear shaft retaining	1
640849	WASHER, flat, 1/2" } Worm gear shaft retaining	1
5009	LOCKWASHER, 1/2" } Worm gear shaft retaining	1
A-9203	SPRING, poppet	1
640850	WASHER, thrust, 1.328 I.D., 2 3/16" O.D.	1
640843	WORM and GEAR SET, capstan winch	1
	GROUP 35-22—HOT CLIMATE RADIATOR	
640880	**Core, Tank and Shroud, Hot Climate Radiator, Assembly** (Bottom Mounted) (Parts required for installation are shown in GROUP 14).	1
648360	CAP, sealing, radiator, assembly (7 lb.) (Use with Side Mounted Radiator 648451 for Hot Climate Radiator) **(CJ-3A After Serial No. .....)**	1
	GROUP 35-23—REFLEX REFLECTOR (After Serial No. .....)	
94094	**Kit, Reflex Reflector**	1
	Consists of:	
649491	1 DRAWING, installation	
643897	1 REFLECTOR, reflex, assembly	
644087	2 SCREW, No. 12 x 1/2", tapping	
	GROUP 35-24—COMPANION FLANGE FOUR GROOVE PULLEY	
643883	**Kit, Companion Flange Pulley**	1
	Consists of:	
641973	4 BOLT, universal propeller shaft flange (Hex. hd., 3/8"-24 x 1 1/2")	
641615	1 DRAWING, installation	
642173	1 PULLEY, companion flange, 6 3/8" O.D., 4 V-type grooves	
	GROUP 35-27—PROPELLER SHAFT GUARD	
641760	**Kit, Propeller Shaft Guards (For Semi or Full Floating Rear Axle)**	1
	Consists of:	
642855	INSTALLATION, propeller shaft guards	

Part No.	Description	Quan. Req'd. Per Assy.

GROUP 35-27—PROPELLER SHAFT GUARD (Continued)

Front Section

641631	1	BAIL, front axle gear carrier, left	
641632	1	BAIL, front axle gear carrier, right	
53849	1	BOLT, hex. hd., 1/4"-28 x 1 1/4"	Bail attaching parts
52847	1	NUT, hex., 1/4"-28	
53843	1	WASHER, flat, 1/4"	
52667	1	LOCKWASHER, 1/4"	
641560	1	DEFLECTOR, chaff, assembly	
53900	1	BOLT, hex. hd., 3/8"-24 x 9/16"	Chaff deflector bracket to frame
52708	1	LOCKWASHER, 3/8"	
53905	2	BOLT, hex. hd., 1/4"-28 x 5/8"	Chaff deflector to skid plate
52847	2	NUT, hex., 1/4"-28	
53843	2	WASHER, flat, 1/4"	
52667	2	LOCKWASHER, 1/4"	
641870	1	SHIELD, front axle gear carrier, assembly	
52921	2	BOLT, hex. hd., 1/4"-28 x 3/4"	Shield to front axle housing
52847	2	NUT, hex., 1/4"-28	
52667	2	LOCKWASHER, 1/4"	

Rear Section

642846	1	BOLT, "U", propeller shaft guard support	
52847	2	NUT, hex., 1/4"-28	"U" Bolt to locating straps
52667	2	LOCKWASHER, 1/4"	
641715	1	BRACKET, propeller shaft guard support	
53911	4	BOLT, rd. hd., 3/8"-16 x 3/4"	Support bracket to skid plate
53908	4	NUT, hex., 3/8"-16	
53909	4	WASHER, flat, 3/8"	
52708	4	LOCKWASHER, 3/8"	
642847	1	BRACKET, propeller shaft guard support, rear	
641711	2	CONNECTOR, flexible, propeller shaft guard, rear	
53898	2	BOLT, hex. hd., 5/16"-24 x 7/8"	Flexible connector to rear propeller shaft guard
52626	2	NUT, hex., 5/16"-24	
53821	2	WASHER, flat, 5/16"	
52558	2	LOCKWASHER, 5/16"	
53898	6	BOLT, hex. hd., 5/16"-24 x 7/8"	Flexible connector and insulator attaching parts
52626	6	NUT, hex., 5/16"-24	
52558	6	LOCKWASHER, 5/16"	
641758	1	GUARD and BRACKET, propeller shaft, assembly	
A-658	2	INSULATOR	
641737	8	PLATE, insulator	
641713	2	STRAP, locating, propeller shaft guard support, rear	
53898	2	BOLT, hex. hd., 5/16"-24 x 7/8"	Locating strap to axle housing
52626	2	NUT, hex., 5/16"-24	
52558	2	LOCKWASHER, 5/16"	
53905	2	BOLT, hex. hd., 1/4"-28 x 5/8"	Locating strap to flexible connector
52847	2	NUT, hex., 1/4"-28	
52667	2	LOCKWASHER, 1/4"	

The next two items are required for Trucks with Full Floating Rear Axle:

641710 BOLT, "U", propeller shaft guard support 1
641712 BRACKET, propeller shaft guard support, rear 1

GROUP 35-28—CYLINDER HEAD, HIGH ALTITUDE

642032 **Kit, High Altitude Cylinder Head** 1

Consists of:

638540 1 GASKET, cylinder head
639650 1 GASKET, water outlet elbow
640035 1 HEAD, cylinder (Ratio 7 to 1)
116670 1 ROD, metering, carburetor

GROUP 35-31—DUAL TAIL AND STOP LIGHT

643922 **Kit, Dual Tail and Stop Light (Up to Serial No. .....)** 1

Consists of:

A-5450	2	CLIP, 7/16"	
643650	1	DRAWING, installation	
643651	1	HARNESS, wiring, assembly	
5113	1	SCREW, rd. hd., No. 10-24 x 1/2"	Wiring harness to body
6352	1	NUT, hex., No. 10-24	
52221	1	LOCKWASHER, No. 10	
646594	1	LIGHT, tail and stop, assembly	
5790	2	NUT, hex., 1/4"-20	Tail and stop light to body
52706	2	LOCKWASHER, 1/4"	
352760	2	LOCKWASHER, 1/4", Int.	

647065 **Kit, Dual Tail and Stop Light (After Serial No. .....)** 1

Consists of same parts as listed for Kit 643922, except the following item:

646919 1 LIGHT, tail and stop, assembly

See Group 15-09B for Components of Tail Light.

Part No.	Description	Quan. Req'd. Per Assy.
	GROUP 35-32—REAR VIEW MIRROR (Inside)	
	Model CJ-2A	
666738	**Mirror, Rear View, Assembly**	1
	Consists of:	
666740	BRACKET, mounting, rear view mirror	1
666739	MIRROR, rear view	1
	Model CJ-3A	
671167	**Kit, Rear View Mirror (Inside)**	1
	Consists of:	
671153	1 DRAWING, installation	
671147	1 MIRROR, rear view, assembly	
52791	2 SCREW, rd. hd., ¼"-20 x ½" } Rear view mirror to windshield frame	
54304	2 NUT, hex., ¼"-20 } Rear view mirror to windshield frame	
52667	2 LOCKWASHER, ¼" } Rear view mirror to windshield frame	
	Serviceable Components for Rear View Mirror 671147:	
671148	BRACKET, mounting, rear view mirror	1
666739	MIRROR, rear view	1
	GROUP 35-33—SPARE WHEEL LOCK	
666628	**Kit, Spare Wheel Lock (Use 670343)**	1
	Consists of:	
666584	1 LOCK, spare wheel, assembly	
A-1318	1 NUT, spare wheel lock	
	For Serviceable Components of this Lock, see Group 31-09B.	
670343	**Kit, Spare Wheel Lock**	1
	Consists of:	
664998	1 LOCK, spare wheel, assembly	
670275	1 NUT, spare wheel lock	
	Serviceable Components for Lock 664998:	
116829	CYLINDER with KEY, spare wheel lock	1
116830	KEY, spare wheel lock cylinder (When ordering give key number)	1
	GROUP 35-34—DUAL WINDSHIELD WIPER (Vacuum Type)	
	Model CJ-2A	
667007	**Kit, Dual Windshield Wiper (Vacuum Type)**	1
	Consists of:	
663368	1 ARM, windshield wiper, assembly (7" long)	
663367	1 BLADE, windshield wiper, assembly (9" long)	
78316	2 CLAMP, ¼", wiper tube to windshield	
53920	2 SCREW, rd. hd., No. 10 x ½", tapping (Windshield wiper tube clamp to windshield frame)	
A-12752	2 HOSE, windshield wiper, 3" long	
A-12753	2 HOSE, windshield wiper, 5¼" long	
663636	1 MOTOR, windshield wiper	
53934	2 SCREW, rd. hd., No. 10-32 x ⅞" } Windshield wiper motor to windshield	
52221	2 LOCKWASHER, No. 10 } Windshield wiper motor to windshield	
663369	1 NUT, windshield wiper arm to shaft	
667074	1 TEE, connecting, windshield wiper hose	
667107	1 TUBE, windshield wiper	
	Model CJ-3A	
94039	**Kit, Dual Windshield Wiper (Vacuum Type)**	1
	Consists of:	
671138	1 ARM, windshield wiper, right, assembly	
671041	1 BLADE, windshield wiper, assembly (8" long)	
671634	2 CLIP, hose	
671964	1 HOSE, tee to wiper	
117651	1 INSTRUCTIONS, installation	
672778	1 MOTOR, windshield wiper, 120° cleaning arc	
53934	2 SCREW, rd. hd., No. 10-32 x ⅞" } Windshield wiper motor to windshield	
53381	2 LOCKWASHER, No. 10 } Windshield wiper motor to windshield	
663369	1 NUT, windshield wiper arm to shaft	
667074	1 TEE, connecting, windshield wiper hose	
	GROUP 35-35—FUEL TANK LOCK-ON CAP	
644829	**Cap, Lock-On, Fuel Tank**	1
	GROUP 35-36—FOG LIGHTS	
645534	**Kit, Fog Lights, Complete (Use 94060)**	1
	Consists of:	
644014	1 KIT, fog lights, only	
54073	2 BOLT, hex. hd., ⅜"-24 x 1¼"	
54359	2 BOLT, hex. hd., ⅜"-24 x 3¼"	

Part No.	Description	Quan. Req'd. Per Assy.
	GROUP 35-36—FOG LIGHTS (Continued)	
52819	2 WASHER, plain, 3/8"	
54088	2 LOCKWASHER, 3/8"	
	The following Components will be supplied:	
644008	ARM, fog light to upper clamp bracket	2
54137	BOLT, rd. hd., 7/16"-14 x 4", crg. } For light bracket attaching	2
53838	NUT, hex., 7/16"-14 } For light bracket attaching	2
52560	LOCKWASHER, 7/16" } For light bracket attaching	2
54129	BOLT, hex. hd., 7/16"-14 x 7/8" } Fog light to bracket	2
644009	WASHER, spherical, 7/16" } Fog light to bracket	2
52560	LOCKWASHER, 7/16" } Fog light to bracket	2
644011	CABLE, connector to fog light switch, assembly	1
644012	CABLE, fog light switch to light switch	1
635935	CONNECTOR, cable	1
644003	LIGHT, fog, left, assembly	1
644004	LIGHT, fog, right, assembly	1
644013	SWITCH, fog light, assembly	1
94060	**Kit, Fog Lights, Complete** (Includes wiring, switch, electrical connectors and attaching parts)	1
	GROUP 35-40—GASOLINE FILTER	
646028	**Kit, Gasoline Filter**	1
	Consists of:	
646052	1 NIPPLE, hex., 1/8" pipe	
646029	1 PURIFIER, gasoline (Skinner)	
	Serviceable Components for Gasoline Purifier 646029:	
647538	CAP, fuel filter	1
647541	CLAMP, fuel filter, assembly	1
647540	ELEMENT and SPRING, fuel filter, assembly	1
647539	GASKET, fuel filter cap	1
647542	NUT, fuel filter clamp	1
	GROUP 35-43—SPOT LIGHT	
94027	**Kit, Spot Light** (For Windshield Mounting) (Includes all electrical wiring, connecting parts and mounting instructions)	1
	GROUP 35-46—UNDER HOOD COMPARTMENT LIGHT	
94019	**Light, Compartment, Under Hood** (Includes all electrica iwiring, mounting and connecting parts also installation instructions)	1
	GROUP 35-47—FIRE EXTINGUISHER	
94000	**Extinguisher, Fire, Assembly (Also used as Tire Inflator)**	1
	Consists of:	
	1 BRACKET, mounting	
	1 EXTINGUISHER, fire	
	1 TUBE, inflator, tire	
94036	**Extinguisher, Fire** (Carbon Tetrachloride Type)	1
	GROUP 35-49—TOOL KIT—DELUXE	
94034	**Kit, Tools, Deluxe**	1
	Consists of:	
	1 BLADE, screw driver, 1/8" x 4"	
	1 BLADE, screw driver, 3/16" x 4"	
	1 BLADE, screw driver, 3/16" x 4" (Phillips Paint)	
	1 BLADE, screw driver, 1/4" x 5"	
	1 BLADE, screw driver, 1/4" x 5" (Phillips Paint)	
	1 BLADE, screw driver, 1/4" x 5" (Special Tip)	
	1 EXTENSION, screw driver	
	All of Above Blades and Extension Fit Screw Driver Handle and Chuck Listed Below:	
	1 HANDLE and CHUCK, screw driver	
	1 HAMMER, ball peen, 12 oz.	
	1 PLIERS, 7", bent nose	
	1 ROLL, tool	
	1 WRENCH, adjustable, crescent type, 8"	
	1 WRENCH and HANDLE, spark plug, 27/32" dia.	
	GROUP 35-50—SPARK PLUG WATERPROOFING KIT	
94031	**Kit, Waterproofing, Spark Plug**	1
	Consists of:	
	4 CONNECTORS, spark plug terminal	
	4 COVERS, waterproof neoprene	
	4 CUPS, metal	
	1 INSTRUCTIONS, installation	
	6 NIPPLES, distributor and coil	
	1 PLUG, vent, distributor	

Part No.	Description	Quan. Req'd. Per Assy.
	GROUP 35-53—TIRE CHAINS (Non-Skid) (Heavy Duty)	
A-7687	**Chains, Tire, Non-Skid** (Includes two (2) chains for tire sizes 6.70 x 15)	1
	GROUP 35-54—MISCELLANEOUS ACCESSORIES	
94014	CLEANER, glass	**In container as prepared by manufacturer**
94009	CLEANER, radiator	
94021	CLEANER, tire side wall	
94007	CLEANER and WAX POLISH, auto	16 oz.
94008	FLUSH, radiator	
94012	OIL, general use	
94013	OIL, penetrating	
94015	POLISH, chrome	
94011	RUST PREVENTATIVE, radiator	
94010	STOP LEAK, radiator	
94001	WATERPROOFER, soldine, clear	Quarts
94002	WATERPROOFER, soldine, clear	Gallons
94003	WATERPROOFER, soldine, Olive Drab	Quarts
94004	WATERPROOFER, soldine, Olive Drab	Gallons
	GROUP 35-56—INSECT SCREEN	
94058	**Screen, Insect** (Includes insect screen and attaching parts)	1
	GROUP 35-57—WINTER FRONT	
94062	**Front, Winter** (May be installed only in conjunction with insect screen 94058)	1
	GROUP 35-58—INSECT SCREEN AND WINTER FRONT	
94059	**Screen, Insect and Winter Front**	1
	Consists of:	
94062	1 FRONT, winter	
94058	1 SCREEN, insect	
	GROUP 35-59—DIRECTIONAL SIGNAL LIGHTS—Model CJ-3A	
94077	**Kit, Directional Signal Light, Complete**	1
	Consists of:	
94071	1 KIT, directional signal light	
647065	1 KIT, dual tail light	
94071	**Kit, Directional Signal Light**	1
	Consists of:	
648910	1 CABLE, extension, directional signal, assembly	
644106	5 CLIP, cable	
635981	5 CONNECTOR, cable	
648894	1 DRAWING, installation, wiring	
345961	1 GROMMET, rubber	
648901	1 LIGHT, signal, parking and directional, left, assembly	
648902	1 LIGHT, signal, parking and directional, right, assembly	
GM-111684	6 SCREW, rd. hd., No. 8 x 3/8"	Lights to grille
GM-138530	6 LOCKWASHER, No. 8	
648895	1 SWITCH, directional signal, assembly	
642377	3 TERMINAL, cable	
GM-111684	1 SCREW, rd. hd., No. 8 x 3/8"	Flasher to dash
GM-178364	1 LOCKWASHER, No. 8, int. and ext.	
	For vehicles with Single Tail Light a Dual Tail Light Kit must be installed in addition to Signal Light Kit.	
	Serviceable Components of Directional Signal Lights:	
648903	DOOR, directional signal light	2
648905	GASKET, directional signal light	2
648907	HOUSING, directional signal light, left, assembly	1
648908	HOUSING, directional signal light, right, assembly	1
648906	SCREW (Signal light door to housing)	2
648909	LOCKWASHER (Signal light door to housing)	2
52124	LAMP (bulb) 6-8V, 3 C.P., Type S 8, No. 1158	2
648904	LENS, directional signal light	2

ALPHABETICAL INDEX

Description	Group No.	Page No.
A		
ABSORBER, shock, front, assembly	28-01	101
ABSORBER, shock, rear, assembly	28-01	101
ADAPTER, engine mounting bracket	10-23	30
ADAPTER, transmission main shaft bearing	17-03	64
AMMETER ASSEMBLY	16-01	63
ANGLE, front bumper clip	32-01	112
ANTI-RATTLER, transmission control shift rod	17-07	69
ANTI-SQUEAK, front fender to cowl side panel, lower	29-01	102
ANTI-SQUEAK, front fender to cowl side panel, upper	29-01	102
ANTI-SQUEAK, fuel tank (1" x 6⅜")	12-01	35
ANTI-SQUEAK, fuel tank (1" x 9")	12-01	35
ANTI-SQUEAK, fuel tank (1" x 18 11/16")	12-01	35
ANTI-SQUEAK, fuel tank (1" x 23 7/16")	12-01	35
ANTI-SQUEAK, fuel tank hold down clamp	12-01	35
ARM, adjusting, windshield, inner, assy	31-11	109
ARM, adjusting, windshield, outer, assy	31-11	109
ARM, fog light to upper clamp bracket	35-36	134
ARM, fuel pump rocker, assembly	12-09	42
ARM, rocker, fuel and vacuum pump	12-09A	44
ARM, steering gear	23-02	85
ARM, throttle shaft, assembly	12-04	36
ARM, windshield, assembly	31-11	109
ARM, windshield wiper, assembly (7")	31-14	111
ARM, windshield wiper, left, assembly	31-14	111
ARM, windshield wiper, right, assembly	35-34	133
ARM and BLADE, windshield wiper, assy	31-13A	111
ARM and COLLAR, pump, assembly	12-04	36
ARM and MOUNTING BRACKET, rear view mirror, assembly	31-15	111
ARM and SCREW, throttle shaft, assy	12-04	36
ARM with KING PIN and king pin lock pin, steering knuckle, upper, assembly	20-07	76
AXLE, front, assembly	20-01	73
AXLE, rear, assembly	21-01	78
AXLE with BRAKES, hubs and drums, front, assembly	20-01	73
AXLE with BRAKES, hubs and drums, rear, complete	21-01	78
B		
BACK, rear passenger seat, assembly	35-09A	122
BAG, spare parts	35-21	129
BAIL, front axle gear carrier	35-27	132
BAIL and SEAT, fuel pump fuel strainer, assembly	12-09	42
BALL, ⅜", shift rail poppet	17-06A	67
BALL, axle shaft universal joint	20-05	75
BALL, control lever	17-06B	68
BALL, fulcrum, control lever	17-06B	68
BALL, gearshift lever	17-06B	68
BALL, power take-off shift shaft	35-03	115
BALL, steering gear	23-02	85
BALL, transmission remote control lever	17-07	69
BALL, transmission shift lever poppet	17-06	67
BALL, universal joint, 11/16"	20-06	76
BALL and ROLLER	35-05	117
BAR, connecting	35-08	121
BAR, draw assembly	35-01	113
BAR, front bumper	32-01	112
BAR, spacer, front top, center bow	35-17	125
BAR, tie, master cylinder	24-06	91
BASE, governor, assembly	35-08	120
BEARINGS	10-05	21
BEARING, assembly	19-02	73
BEARING, ball, capstan drive worm	35-21	131
BEARING, ball, governor shaft	35-08	120
BEARING, center, lower half	10-04	20
BEARING, center, upper half	10-04	20
BEARING, front, lower half	10-04	20
BEARING, front, upper half	10-04	20
B		
BEARING, governor, clutch	35-08	120
BEARING, heat control valve shaft	10-20	29
BEARING, intermediate gear	18-05	71
BEARING, needle, capstan drive worm	35-21	131
BEARING, output clutch shaft	18-04	71
BEARING, power take-off drive gear	35-03	115
BEARING, rear, lower half	10-04	21
BEARING, rear, upper half	10-04	21
BEARING, realease, clutch	11-02	33
BEARING, roller, governor throttle shaft	35-08	120
BEARING, sleeve, winch rope roller	35-21	131
BEARING, steering bell crank	23-01	83
BEARING, steering column, wheel end, assy.	23-02	85
BEARING, thrust, governor shaft	35-08	120
BEARING, thrust, winch rope roller	35-21	131
BEARING, transmission main drive gear	17-02	64
BEARING, transmission main shaft, rear end.	17-03	64
BEARING and SHAFT, assembly	14-04	49
BEARING SET, connecting rod	10-05	21
BEARING SET, crankshaft, center	10-04	20
BEARING SET, crankshaft, front	10-04	20
BEARING SET, crankshaft, rear	10-04	20
BELLOWS, water pump seal	14-04	49
BELT, drive, fan and generator	14-05	50
BELT, drive, governor	35-08	119
BEZEL, parking light	14-03	49
BEZEL and LENS, headlight tell-tale light	15-11A	60
BLADE, windshield wiper arm	31-14	111
BLADE, windshield wiper assembly	31-14	111
BLOCK, accelerator throttle rod adjusting	12-08	41
BLOCK, junction, 2 Post	15-15	61
BLOCK, junction, 3 Post	15-07A	55
BLOCK, starter rod to dash	15-13A	61
BLOCK, weather, windshield hinge	31-11	109
BLOCK and BEARING, cylinder, assy	10-02	18
BLOCK and BEARING, with piston, cylinder, assembly	10-02	18
BODY, air cleaner, assembly	12-05	39
BODY ASSEMBLY	31-01	102
BODY ASSEMBLY (Painted)	31-01	102
BODY, complete assembly	31-01	102
BODY, crankcase ventilator, assembly	10-18	29
BODY, front, sub-assembly	31-01	103
BODY, fuel pump	12-09	42
BODY, governor assembly	35-08	120
BODY, governor control plunger, assy	35-08	121
BODY, ignition switch	15-05A	52
BODY, oil pump	10-13	24
BODY, propeller shaft universal joint	35-05	117
BODY, rear, assembly	31-01	103
BODY, spare wheel carrier, assembly	31-07	107
BODY, water pump	14-04	49
BODY with BUSHING, assembly	10-13B	26
BODY with OIL SEAL, fuel and vacuum pump	12-09A	44
BOLT, 7/16"-20 x 2"	10-16A	26
BOLT, battery clamp	15-18A	62
BOLT, connecting rod bearing cap, ⅜"-24	10-05	21
BOLT, connecting rod bearing cap, 7/16"-20	10-05	21
BOLT, crg., ¼"-20 x 1⅛"	35-14	152
BOLT, crg., ⅜"-16 x 1"	35-14	125
BOLT, crg., ⅜"-16 x 2½"	35-14	125
BOLT, differential bearing cap	20-02	73
BOLT, dowel, crankshaft	10-03	19
BOLT, eye, master cylinder	24-06	91
BOLT, eye, safety chain	35-15	125
BOLT, hex. hd., No. 10 x ½"	24-07	92
BOLT, hex. hd., ¼"-20 x ½"	10-22	30
BOLT, hex. hd., ¼"-20 x 9/16"	12-08	41
BOLT, hex. hd., ¼"-20 x ⅝"	12-01	35
BOLT, hex. hd., ¼"-20 x ¾"	24-01	88
BOLT, hex. hd., ¼"-20 x 1⅜"	31-11	110
BOLT, hex. hd., ¼"-20 x 1 7/16"	31-11	110
BOLT, hex. hd., ¼"-28 x ½"	12-05	41

Description B	Group No.	Page No.
BOLT, hex. hd., 1/4"-28 x 5/8"	15-17	61
BOLT, hex. hd., 1/4"-28 x 3/4"	35-27	132
BOLT, hex. hd., 1/4"-28 x 1 1/4"	35-27	132
BOLT, hex. hd., 5/16"-18, Cap to bracket	17-07	69
BOLT, hex. hd., 5/16"-18 x 1/2"	12-09A	44
BOLT, hex. hd., 5/16"-18 x 5/8"	10-14	26
BOLT, hex. hd., 5/16"-18 x 3/4"	10-15	26
BOLT, hex. hd., 5/16"-18 x 7/8"	12-01	36
BOLT, hex. hd., 5/16"-18 x 1"	10-13A	25
BOLT, hex. hd., 5/16"-18 x 1 1/16"	11-01	31
BOLT, hex. hd., 5/16"-18 x 1 1/4"	11-02	35
BOLT, hex. hd., 5/16"-18 x 2"	23-02	85
BOLT, hex. hd., 5/16"-18 x 2 1/2"	10-13A	25
BOLT, hex. hd., 5/16"-18 x 2 9/16"	10-10	23
BOLT, hex. hd., 5/16"-18 x 3" cylinder to bracket	24-06	91
BOLT, hex. hd., 5/16"-18 x 3 1/16"	10-10	23
BOLT, hex. hd., 5/16"-18 x 3 11/16"	10-10	23
BOLT, hex. hd., 5/16"-18 x 4 1/8"	10-10	23
BOLT, hex. hd., 5/16"-24 x 5/8"	11-02	33
BOLT, hex. hd., 5/16"-24 x 3/4"	10-16A	26
BOLT, hex. hd., 5/16"-24 x 7/8"	13-01	46
BOLT, hex. hd., 5/16"-24 x 1"	10-23	30
BOLT, hex. hd., 5/16"-24 x 1 1/8"	13-01	46
BOLT, hex. hd., 5/16"-24 x 1 1/4"	13-01A	47
BOLT, hex. hd., 5/16"-24 x 1 7/16"	23-01	83
BOLT, hex. hd., 5/16"-24 x 1 1/2"	31-09	108
BOLT, hex. hd., 5/16"-24 x 1 3/4"	11-02	35
BOLT, hex. hd., 5/16"-24 x 2"	10-23	30
BOLT, hex. hd., 5/16"-24 x 1 29/32"	15-01	51
BOLT, hex. hd., 5/16"-24 x 4 1/2"	32-01	112
BOLT, hex. hd., 3/8"-16 x 5/8"	10-23	30
BOLT, hex. hd., 3/8"-16 x 3/4"	10-11A	24
BOLT, hex. hd., 3/8"-16 x 7/8"	15-01	51
BOLT, hex. hd., 3/8"-16 x 1", support to block	15-02	51
BOLT, hex. hd., 3/8"-16 x 1 1/8"	10-02	18
BOLT, hex. hd., 3/8"-16 x 1 1/4"	15-02	51
BOLT, hex. hd., 3/8"-16 x 1 3/4"	31-03	106
BOLT, hex. hd., 3/8"-24 x 9/16"	24-01	88
BOLT. hex. hd., 3/8"-24 x 3/4"	10-12	24
BOLT, hex. hd., 3/8"-24 x 13/16"	24-04	89
BOLT, hex. hd., 3/8"-24 x 7/8"	14-03	49
BOLT, hex. hd., 3/8"-24 x 1"	10-12	24
BOLT, hex. hd., 3/8"-24 x 1 1/8"	10-22	30
BOLT, hex. hd., 3/8"-24 x 1 1/4"	10-11	24
BOLT, hex. hd., 3/8"-24 x 1 3/8"	24-01	87
BOLT, hex. hd., 3/8"-24 x 1 5/8"	10-22	30
BOLT, hex. hd., 3/8"-24 x 1 3/4"	31-02	104
BOLT, hex. hd., 3/8"-24 x 2 1/8"	10-22	30
BOLT, hex. hd., 3/8"-24 x 2 7/8"	35-13	125
BOLT, hex. hd., 3/8"-24 x 3 1/4"	35-36	133
BOLT, hex. hd., 7/16"-14 x 3/4"	35-02	113
BOLT, hex. hd., 7/16"-14 x 7/8"	35-36	134
BOLT, hex. hd., 7/16"-14 x 1 1/8"	10-11A	24
BOLT, hex. hd., 7/16"-14 x 1 1/4"	10-22	30
BOLT, hex. hd., 7/16"-14 x 1 1/2"	35-06	117
BOLT, hex. hd., 7/16"-20 x 1 1/8"	35-01	113
BOLT, hex. hd., 7/16"-20 x 2"	35-15	125
BOLT, hex. hd., 7/16"-20 x 2 1/4"	23-01	83
BOLT, hex. hd., 7/16"-20 x 3"	23-02	86
BOLT, hex. hd., 7/16"-20 x 3 3/4"	23-02	86
BOLT, hex. hd., 1/2"-20, L.H. Thd. Wheel Hub	25-01	94
BOLT, hex. hd., 1/2"-20 x 1 1/4"	35-01	113
BOLT, hex. hd., 3/4"-16 x 2"	35-01	113
BOLT, master cylinder outlet fitting	24-06	91
BOLT, pivot, spring	27-03	100
BOLT, rd. hd., No. 10-24 x 3/4"	11-02	33
BOLT, rd. hd., 3/8"-16 x 3/4"	35-27	132
BOLT, rd. hd., 7/16"-14 x 4" crg.	35-36	134
BOLT, socket hd., 5/16"-18 x 1", bearing retainer	17-02	64
BOLT, special, 3/8"-16 x 2 1/4", rear bearing cap and brake plate to case	18-02	69
BOLT, special, 3/8"-16 x 2 1/2", rear bearing cap and brake plate to case	18-02	69
BOLT, steering knuckle stop	20-07	76
BOLT, step, 5/16"-18 x 1 1/2"	31-02	104
BOLT, transfer case support	18-09	72
BOLT, "U", propeller shaft guard support	35-27	132

Description B	Group No.	Page No.
BOLT, "U", spring shackle, left hand thd.	27-03	100
BOLT, "U", universal joint bearing	19-02	73
BOLT, "U", universal propeller shaft flange	35-24	131
BOLT, welding, 5/16"-18 x 5/8"	29-01	102
BOLT and NUT, battery clamp, assembly	15-18A	62
BOLT and NUT, center, front spring, assy.	27-01	98
BOLT and NUT, center, rear spring, assy.	27-02	99
BOLT and WASHER, hex. hd., 1/4"-29 x 3/8"	24-05	89
BOLT and WING NUT, battery hold down frame clamp	15-18	62
BOOT, master cylinder	24-06	91
BOOT, front wheel brake cylinder	24-05	89
BOW, center, rear top	35-10	122
BOW, front top, assembly	35-17	125
BOW, side, front top, assembly	35-17	125
BOW, side assembly	35-17A	126
BOWL, fuel pump	12-09	42
BOX, gear, capstan drive	35-21	131
BRACE, front fender	29-01	102
BRACE, generator	15-01	50
BRACE, instrument panel to dash	31-05	106
BRACKET, accelerator cross shaft	12-08	41
BRACKET, adjusting screw	24-01	86
BRACKET, air cleaner support	12-05	39
BRACKET, ammeter mounting	16-01	63
BRACKET, anchor, fuel tank hold down, outer	12-01	35
BRACKET, brake pedal spring	24-08	93
BRACKET, clutch	11-01	31
BRACKET, clutch control frame	11-02	33
BRACKET, conduit clamp	24-01	86
BRACKET, door hinge, upper	31-11	110
BRACKET, door hinge, support, upper	35-17	125
BRACKET, engine front, support, lower half	10-23	30
BRACKET, engine front, support, upper half	10-23	30
BRACKET, engine mounting, rear	10-23	30
BRACKET, engine stay cable, rear	10-23	30
BRACKET, front brake hose to frame	24-07	92
BRACKET, front intermediate cross member	26-01	95
BRACKET, front license tag, assembly	15-10	60
BRACKET, front support, engine	26-01	97
BRACKET, fuel tank hold down, front, inner	12-01	35
BRACKET, guide and spring, ratchet tube, assembly	24-01	86
BRACKET, hood catch	30-01	102
BRACKET, horn, assembly	15-17	61
BRACKET, horn mounting	15-17	61
BRACKET, master cylinder to frame	24-06	91
BRACKET, mounting, fuel gauge to dash	12-02	36
BRACKET, mounting, heat indicator	16-02	63
BRACKET, mounting, oil filter, assembly	10-16A	26
BRACKET, mounting, oil gauge	16-03A	63
BRACKET, mounting, rear vision mirror, assembly	31-15	112
BRACKET, oil filter	10-16A	26
BRACKET, pivot, front spring rear and rear spring front	26-01	97
BRACKET, pivot, windshield, assembly	31-11	109
BRACKET, propeller shaft guard support	35-27	132
BRACKET, radiator chaff screen	35-12	124
BRACKET, radiator guard to frame	26-01	97
BRACKET, radiator support	14-01	48
BRACKET, rear axle brake tube tee	24-07	92
BRACKET, rear shock absorber, inner	26-01	97
BRACKET, retainer, pedal shaft, assembly	26-01	97
BRACKET, rope roller, assembly	35-21	129
BRACKET, shackle, assembly, front spring front and rear spring rear	26-01	97
BRACKET, spare wheel carrier	31-09A	108
BRACKET, speedometer mounting	16-04	64
BRACKET, steering bell crank	23-01	83
BRACKET, storage, front top bow	31-07	107
BRACKET, storage, rear top bow	31-07	107
BRACKET, support, body, rear	26-01	97
BRACKET, support, door hinge, inner half, assembly	35-17	126
BRACKET, support, door hinge, outer half, assembly	35-17	126

Description B	Group No.	Page No.
BRACKET, support, engine, front, left	26-01	97
BRACKET, support, governor, assembly	35-08	119
BRACKET, support, hose	35-18	128
BRACKET, support, oil filler tube	10-16	26
BRACKET, support, spare wheel, assembly	31-09A	108
BRACKET, support, tail pipe	13-01A	47
BRACKET, support, top side rail	31-11	110
BRACKET, support, winch drive, assembly	35-21	129
BRACKET, tail and stop light	15-09B	60
BRACKET, top bow front, assembly	31-07	107
BRACKET, top bow rear, assembly	31-07	107
BRACKET, windshield adjusting arm to tubing frame, assembly	31-11	109
BRACKET and BUSHING, support, winch drive, assembly	35-21	131
BRACKET and CAP, remote control cross shift	17-07	69
BRACKET and PLATE, governor, assy.	35-08	119
BRACKET and SHAFT, front shock absorber, frame end	28-01	101
BRACKET and SHAFT, rear shock absorber, frame end	28-01	101
BRAKE, emergency, assembly	24-01	86
BRAKE, front wheel, assembly	24-02	89
BRAKE, rear wheel, assembly	24-02	89
BREAKER, circuit, thermal	15-12A	60
BREATHER, transfer case, assembly	18-02	69
BREATHER, transmission case, assembly	17-01	64
BRUSH, horn wire contact	15-17A	62
BUMPER, back stop	31-11	110
BUMPER, frame, front and rear, axle	26-01	97
BUMPER, hood top windshield	30-01	102
BUSHING, axle shaft outer	20-05	75
BUSHING, body	10-13B	26
BUSHING, camshaft, front	10-11	24
BUSHING, capstan shaft	35-21	131
BUSHING, clutch shaft	10-21	29
BUSHING, front spring	27-01	98
BUSHING, governor shaft	35-08	120
BUSHING, operating lever	24-01	86
BUSHING, output clutch shaft pilot	18-04	71
BUSHING, reducing	16-02	63
BUSHING, reducing, 1/4" to 1/8"	10-19	29
BUSHING, reverse idler gear	17-04	67
BUSHING, rocker arm pin	12-09A	44
BUSHING, rubber, 11/16" dia.	15-06	52
BUSHING, shock absorber mounting pin	28-01	101
BUSHING, speedometer drive pinion	16-04	64
BUSHING, spring shackle, assy., thread	27-03	100
BUSHING, starting motor shaft	10-22	30
BUSHING, steering column support	23-03	86
BUSHING, steering gear housing	23-02	85
BUSHING, transmission main shaft, second speed gear	17-03	64
BUSHING, wheel bearing spindle	20-07	76
BUSHING, winch shaft	35-21	131
BUSHING, windshield adjusting arm bracket	31-11	110
BUTTON, horn	15-17A	62
BUTTON, curtain fastener	35-17B	127
BUTTON and SPRING, centering	35-05	117

C

Description C	Group No.	Page No.
CABLE, clutch control lever	11-02	33
CABLE, connector to fog light switch, assy.	35-36	134
CABLE, engine stay, assembly	10-23	30
CABLE, fog light switch to light switch	35-36	134
CABLE, fuel gauge dash unit to tank unit	15-07	52
CABLE, heater switch to heater	35-18	128
CABLE, horn, assembly	15-17A	62
CABLE, horn button to connector, assy.	15-07	52
CABLE, horn to junction block	15-17A	62
CABLE, ignition coil to ammeter	15-07	52
CABLE, ignition coil secondary, assembly	15-05	51
CABLE, ignition spark plug No. 2, assy.	15-06	52
CABLE, ignition spark plug No. 3 and 4, assy.	15-06	52
CABLE, ignition switch to fuel gauge	15-07	52
CABLE, jumper, ignition switch to heater switch	35-18	128
CABLE, positive, battery to starting switch, assembly	15-18A	62
CABLE, primary, ignition coil	15-05A	52
CABLE, spark plug, No. 1	15-06	52
CABLE, starting switch to starting motor, assembly	15-18A	62
CABLE and CONDUIT, ratchet tube assy.	24-01	86
CAGE, universal joint	20-06	76
CAM, wheel brake anchor pin	24-04	89
CAMSHAFT	10-11	24
CAP, capstan, winch	35-21	131
CAP, filler, master cylinder	24-06	91
CAP, filler, radiator, assembly	14-01	48
CAP, fuel filter	35-40	134
CAP, fuel tank, assembly	12-01	35
CAP, king pin bearing, lower, assembly	20-07	76
CAP, lock-on, fuel tank	35-35	133
CAP, output clutch shaft bearing front	18-02	69
CAP, pulley drive pinion bearing	35-06	117
CAP, radiator filler, assembly	14-01	48
CAP, retainer, capstan drive worm ball brg.	35-21	131
CAP, transmission shift rail	17-06A	67
CAP, universal joint yoke sleeve dust	19-02	73
CAP, wheel hub	25-02	95
CAPSTAN, 3 1/2" dia.	35-21	131
CAP and BUSHING, output shaft bearing rear, assembly	18-02	69
CAP and LEVEL INDICATOR, oil assy.	10-16	26
CARBURETOR ASSEMBLY	12-04	36
CARRIER, clutch release bearing	11-02	33
CARRIER, pulley drive gear, assembly	35-06	117
CASE, differential	20-03	73
CASE, power take-off gear, assembly	35-04	115
CASE, transfer	18-02	69
CASE, transmission assembly	17-01	64
CASE and PLUG, transmission assembly	17-01	64
CATCH, hood, assembly	30-01	102
CATCH, seat leg lock, assembly	35-09	121
CATCH, windshield clamp	31-11	110
CHAIN, drive, camshaft	10-11	24
CHAIN, tail gate, assembly	31-08	108
CHAINS, tire, non-skid	35-53	135
CHECK, intake ball, assembly	12-04	36
CHECK and PLUG, discharge disc, assy.	12-04	36
CLAMP, 2 3/8" I.D.	12-05	40
CLAMP, air cleaner oil cup	12-05	39
CLAMP, axle brake tube	24-07	92
CLAMP, carburetor tube	12-05	39
CLAMP, conduit	24-01	87
CLAMP, conduit to cross member	24-01	87
CLAMP, cross steering tie rod socket	23-01	83
CLAMP, exhaust pipe extension	13-01	46
CLAMP, exhaust pipe to muffler	13-01	46
CLAMP, fuel filter, assembly	35-40	134
CLAMP, fuel pump valve	12-09	42
CLAMP, fuel tank hold down	12-01	35
CLAMP, hose, 3/4" dia.	12-05	39
CLAMP, hose, 1 1/32"	35-18	128
CLAMP, hose, 2 9/32" dia.	12-05	39
CLAMP, muffler tail pipe	13-01	46
CLAMP, oil filter bracket	10-16A	26
CLAMP, radiator hose, 1 7/8" dia.	14-02	49
CLAMP, steering column, assembly	23-02	85
CLAMP, steering column support	23-03	86
CLAMP, steering connecting rod	23-01	83
CLAMP, tube, assembly	12-04	36
CLAMP, windshield assembly	31-11	110
CLAMP, with BOLT and NUT, carburetor air horn assembly	12-05	39
CLEANER, air, assembly	12-05	39
CLEANER, glass	35-54	135
CLEANER, radiator	35-54	135
CLEANER, tire side wall	35-54	135
CLEANER and WAX POLISH, auto	35-54	135
CLEVIS, adjustable, 5/16"	24-01	87
CLIP, 1/4"	12-03	36
CLIP, 7/16"	10-17	27
CLIP, 7/16", wiring to frame side rail	15-07	53

Description C	Group No.	Page No.
CLIP, 5/16", 7/32" hole	10-17	27
CLIP, accelerator retracting spring	12-08	41
CLIP, anti-rattle, clutch release lever	11-01	31
CLIP, brake hose to bracket spring lock	24-07	92
CLIP, brake pipe, 5/16", closed type	24-07	92
CLIP, cable conduit to flywheel housing	24-01	87
CLIP, clutch lever shaft	35-08	121
CLIP, front spring	27-03	100
CLIP, front, spring leaf	27-01	99
CLIP, governor control plunger	35-08	121
CLIP, governor shaft	35-08	120
CLIP, hand brake retracting spring	24-01	87
CLIP, hose	35-34	133
CLIP, rear spring	21-01	78
CLIP, rear spring leaf	27-02	99
CLIP, retaining, driver's seat pan	31-09	108
CLIP, starter rod retracting spring	15-13A	61
CLIP, tail lamp cable to frame	15-07	53
CLIP, tube, 3/16"	24-07	92
CLIP, tube, 1/4"	12-03	36
CLIP, tube to side rail	24-07	92
CLIP, wiring harness to front floor pan	15-07	53
CLUTCH ASSEMBLY	11-01	31
CLUTCH, governor drive	35-08	120
COCK, drain, cylinder block water jacket	10-02	18
COLLAR, clutch, assembly	35-08	120
COLLECTOR, countershaft gear oil, assy.	17-05	67
COLUMN and BEARING, steering assembly.	23-02	85
COLUMN with REMOTE CONTROL SHAFT, steering assembly	17-07	69
CONDUIT and GUIDE, choke control assy.	12-06	41
CONDUIT and GUIDE, throttle control, assy.	12-07	41
CONE and ROLLERS, differential bearing	20-03	73
CONE and ROLLERS, drive pinion bearing	20-04	75
CONE and ROLLERS, king pin bearing	20-07	77
CONE and ROLLERS, output shaft bearing	18-04	71
CONE and ROLLERS, power take-off input and output shaft	35-04	115
CONE and ROLLERS, power take-off stub shaft	35-06	117
CONE and ROLLERS, pulley shaft	35-06	117
CONE and ROLLERS, rear axle shaft bearing	22-05	82
CONE and ROLLERS, wheel bearing, assy.	25-03	95
CONNECTION, fuel line to fuel pump	12-03	36
CONNECTOR, 2 wire slip	15-07	53
CONNECTOR, 3 wire slip	15-07	53
CONNECTOR, cable	35-36	134
CONNECTOR, flared tube	10-17	27
CONNECTOR, flexible propeller shaft guard, rear	35-27	132
CONTAINER, steering knuckle oil seal, assy.	20-07	77
CONTROL, choke, assembly	12-06	41
CONTROL, governor, assembly	35-08	120
CONTROL, throttle, assembly	12-07	41
CORE, tank and shroud, radiator, assembly	35-22	131
COUNTERSHAFT, transmission	17-05	67
COUPLING, female, 1/4" tube	16-03A	64
COVER ASSEMBLY	10-13	24
COVER, axle housing	20-02	73
COVER, axle housing gear	22-02	80
COVER, body	10-13A	26
COVER, clutch control lever, hole, assembly	11-02	33
COVER, cross steering tie rod socket, dust	23-01	83
COVER, chain, assembly	31-08	108
COVER, fuel and vacuum pump	12-09A	44
COVER, fuel pump top	12-09	42
COVER, gear assembly	10-12	24
COVER, gear shift lever housing	31-10	109
COVER, hole trailer electric coupling socket	31-10	109
COVER, inspection, brake master cylinder	24-06	91
COVER, inspection, transmission case	10-22	30
COVER, oil filter, assembly	10-16A	26
COVER, oil hole	35-21	131
COVER, propeller shaft universal joint	35-05	117
COVER, pulley hub	35-08	120
COVER, steering column oil hole	23-02	85
COVER, steering connecting rod, dust	23-01	83
COVER, steering gear housing, upper	23-02	85
COVER, timing chain, assembly	10-12	24
COVER, timing hole, flywheel housing	10-22	30
COVER, transfer case, bottom, assembly	18-02	69
COVER, transfer case, rear	18-02	69
COVER, transmission case	17-01	64
COVER, trim, driver's seat back, assy.	31-09	108
COVER, trim, driver's seat cushion, assy.	31-09	108
COVER, trim, rear seat back, assembly	35-09	121
COVER, trim, rear seat cushion, assembly	35-09	121
COVER, valve spring	10-10	23
COVER and CLIP, clutch control lever, hole, assembly	11-02	33
COVER and PIN, bowl, assembly	12-04	36
CRANK, bell, steering	23-01	83
CRANK, starting, assembly	35-20	129
CRANK, starting, handle end	35-20	129
CRANK, starting, jaw end	35-20	129
CRANK, steering connecting rod bell, assy.	23-01	83
CRANKSHAFT ASSEMBLY	10-03	19
CROSS MEMBER, frame, center	26-01	95
CROSS MEMBER, frame, intermediate	26-01	95
CROSS MEMBER, frame, rear	26-01	95
CROSS MEMBER, support, engine, rear, assembly	26-01	97
CROSS PIECE, windshield frame, upper, assembly	31-11	110
CUP, clutch pressure spring	11-01	31
CUP, differential bearing cone and rollers	20-03	73
CUP, drain, fuel and vacuum pump	12-09A	44
CUP, drive pinion bearing	20-04	75
CUP, front wheel brake cylinder	24-05	89
CUP, horn button spring	15-17A	62
CUP, king pin bearing	20-07	77
CUP, master cylinder check valve	24-06	91
CUP, master cylinder primary	24-06	91
CUP, master cylinder secondary	24-06	91
CUP, oil, air cleaner	12-05	40
CUP, oil, governor	35-08	120
CUP, output shaft bearing cone and rollers	18-04	71
CUP, power take-off input and output shaft bearing	35-04	115
CUP, pulley shaft cone and rollers	35-06	117
CUP, rear wheel bearing	22-05	82
CUP, rear wheel brake cylinder	24-05	89
CUP, retaining, transfer case, insulator	26-01	97
CUP, steering gear cam steel balls	23-02	86
CUP, stub shaft cone and roller	35-06	117
CUP, transfer case insulator retaining	18-09	72
CUP, wheel bearing cone and rollers	25-03	95
CURTAIN, back, rear top, assembly	35-10B	123
CURTAIN, front top back, assembly	35-17	125
CURTAIN, side door, assembly	35-17B	127
CUSHION, driver's seat, assembly	31-09	108
CUSHION, rear passenger seat, assembly	35-09A	122
CUSHION, rear seat, assembly	35-09	121
CYLINDER, brake master, assembly	24-06	91
CYLINDER, wheel brake, assembly	24-05	89
CYLINDER, ignition switch lock	15-05A	52
CYLINDER and (1) KEY, ignition switch, assembly	15-05	51
CYLINDER and KEY, spare wheel lock	35-33	133

D

Description	Group No.	Page No.
DEFLECTOR, chaff, assembly	35-27	132
DEFLECTOR, radiator brush guard, assy.	35-12	124
DEFLECTOR, radiator side air	14-03	49
DEFLECTOR, radiator top air	14-03	49
DIAPHRAGM, fuel and vacuum pump, assy.	12-09A	44
DIAPHRAGM and ROD, assembly	12-09	42
DIFFERENTIAL, formate type gears, assy.	20-03	73
DIFFERENTIAL, generated type gears, assy.	20-03	73
DIFFERENTIAL, semi-floating rear axle, assembly	22-03	84
DISC, metering rod	12-04	30
DISC, rotor	10-13	20
DISC, thrust, governor shaft	35-08	126
DOOR	15-09B	60
DOOR, ASSEMBLY	35-17B	127

Description	Group No.	Page No.
D		
DOOR, front, assembly	35-17A	127
DOOR, headlight, assembly	15-09	58
DOOR, parking light, assembly	15-09A	58
DOOR, tail and stop light	15-09B	60
DOOR, trimmed, assembly	35-17	125
DOOR and LENS, tail and stop light, assy.	15-09B	60
DOWEL, crankshaft bearing	10-03	19
DOWEL, flywheel to crankshaft	10-21	29
DRAWING, installation	35-08	120
DRAWING, pintle hook installation	35-15	125
DRIVE, pulley, assembly	35-06	117
DRIVER, screw	33-01	112
DRUM, emergency brake	24-01	87
DRUM, front and rear wheel brake	25-02	95
E		
ECCENTRIC, wheel brake shoe	24-04	89
ELBOW, inverted flared tube, ¼"	10-17	27
ELBOW, outlet, water	10-02	18
ELBOW, pipe, ⅛"	10-18	29
ELBOW, pipe, ¼"	10-18	29
ELBOW, vent, front axle	20-02	73
ELEMENT, air cleaner filter	12-05	40
ELEMENT, oil filter	10-16A	26
ELEMENT and GASKET, oil filter	10-16A	26
ELEMENT and SPRING, fuel filter, assy.	35-40	134
ELL, inverted flared tube, ¼"-45°	10-17	28
ENAMEL, air dry	34-01	113
ENGINE ASSEMBLY	10-01	18
EXTENSION, exhaust pipe	13-01A	48
EXTENSION, floor, assembly	31-04	106
EXTINGUISHER, fire, assembly	35-47	134
EYELET, curtain fastener	35-10	122
F		
FACING, clutch driven plate	11-01	31
FACING SET, clutch driven plate	11-01	31
FAN ASSEMBLY	14-05	50
FASTENER, curtain, male, flush type	35-17	126
FASTENER, curtain, single, turn button, stud base	35-10B	123
FASTENER, tube 5/16"	24-01	87
FENDER, front, assembly	29-01	101
FERRULE, insulating	15-17A	62
FILLER, extension, front floor pan diagonal sill	31-03	106
FILLER, rear floor pan cross sill	31-04	106
FILTER, fuel and vacuum pump	12-09A	44
FILTER, oil, assembly	10-16A	26
FITTING, lubricating	23-01	83
FITTING, master cylinder outlet	24-06	91
FITTING, shift lever pivot pin lubricating	18-06	71
FLANGE, axle drive shaft	20-05	75
FLANGE, body, assembly	12-04	36
FLANGE, companion rear	18-04	71
FLANGE, companion, power take-off	35-04	115
FLAP, opening, rear top back curtain, assy.	35-10	122
FLAP, rear top back curtain, assembly	35-10A	123
FLOAT, oil, assembly	10-15	26
FLOAT and LEVER, assembly	12-04	36
FLUID, hydraulic brake	24-09	94
FLUID, shock absorber	28-01	101
FLUSH, radiator	35-54	135
FLYWHEEL, assembly	10-21	29
FORK, underdrive and direct shift	18-07	71
FORK, front wheel drive shift	18-07	71
FORK, low and reverse	17-06A	67
FORK, operating, shaft and lever, assembly	35-08	120
FORK, shift, capstan winch	35-21	131
FORK, transmission shift, high and intermediate	17-06	67
FORK and ROD, power take-off shifting, assembly	35-03	115
FRAME ASSEMBLY	26-01	95
FRAME, battery hold down, assembly	15-18	62
FRAME, curtain window light	35-10	122
FRAME, door window	35-17	126
FRAME, driver's seat, assembly	31-09	108
F		
FRAME, passenger seat, assembly	35-19	128
FRAME, tubular, windshield, assembly	31-11	110
FRAME, windshield glass lower, assembly	31-11	110
FRAME and GLASS, windshield assembly	31-11	110
FRONT, winter	35-57	135
FULCRUM, clutch release lever	11-02	33
G		
GASKET, axle housing cover	20-02	73
GASKET, axle shaft	21-01	78
GASKET, backing plate to rear bearing cap	24-01	87
GASKET, bearing retainer	35-04	115
GASKET, body flange	12-04	36
GASKET, body, upper	12-05	40
GASKET, bottom cover	18-02	71
GASKET, bowl cover	12-04	36
GASKET, capstan cap	35-21	131
GASKET, capstan drive worm bearing retainer cap	35-21	131
GASKET, capstan filler plug	35-21	131
GASKET, capstan winch cover plate	35-21	131
GASKET, carburetor	12-04A	39
GASKET, carburetor insulator and diffuser	10-01	18
GASKET, chain cover	10-01	18
GASKET, control housing	17-06B	68
GASKET, cover	10-13	24
GASKET, cover plate cap screw	12-09A	44
GASKET, cover to body screw	10-13	24
GASKET, cylinder block, front	10-01	18
GASKET, cylinder head	10-01	18
GASKET, drain plug	10-14	26
GASKET, exhaust pipe flange	10-01	18
GASKET, fitting brake hose	24-07	92
GASKET, fuel filter cap	35-40	134
GASKET, fuel gauge tank unit	12-02	36
GASKET, fuel pump bowl	12-09	42
GASKET, fuel pump cage	12-09	42
GASKET, fuel pump cover plate	12-09A	44
GASKET, fuel pump to cylinder block	10-01	18
GASKET, fuel pump valve	12-09	42
GASKET, gear housing cover	22-02	80
GASKET, governor body	35-08	120
GASKET, governor bumper spring	35-08	120
GASKET, intake and exhaust manifold	10-01	18
GASKET, license plate window	15-09B	60
GASKET, main drive gear bearing retainer	17-02	64
GASKET, master cylinder cover	24-06	91
GASKET, master cylinder outlet fitting	24-06	91
GASKET, metering rod jet and plug	12-04	36
GASKET, needle seat and plug	12-04	36
GASKET, nozzle	12-04	36
GASKET, oil cup, lower	12-05	40
GASKET, oil filler tube cap	10-16	26
GASKET, oil filter cover	10-16A	27
GASKET, oil float support	10-01	18
GASKET, oil pan	10-01	18
GASKET, oil pan drain plug	10-01	18
GASKET, oil pump cover	10-01	18
GASKET, oil pump shaft	10-01	18
GASKET, oil pump to cylinder block	10-01	18
GASKET, oil relief spring retainer	10-01	18
GASKET, oil slinger	10-01	18
GASKET, output clutch shaft bearing cap	18-02	71
GASKET, parking light door	15-09A	58
GASKET, parking light lens	14-03	49
GASKET, pinion oil seal	20-04	75
GASKET, power take-off cover plate	35-04	115
GASKET, power take-off drive housing	35-03	115
GASKET, power take-off oil retainer and pilot	35-04	115
GASKET, propeller shaft universal joint body grease cover	35-05	117
GASKET, radiator filler cap	14-01	48
GASKET, rear brake grease protector	25-03A	95
GASKET, rear cover	18-02	71
GASKET, spark plug	10-01	18
GASKET, steering gear housing side cover	23-02	86
GASKET, steering knuckle oil seal, assembly	20-07	77
GASKET, strainer plug	12-04	36

Description	Group No.	Page No.
G		
GASKET, transmission case cover	17-01	64
GASKET, transmission to transfer case	17-08	69
GASKET, universal joint trunnion	19-02	73
GASKET, valve cover screw	10-01	18
GASKET, valve spring cover	10-01	18
GASKET, ventilator to valve cover	10-01	18
GASKET, water outlet elbow	10-01	18
GASKET, water pump to cylinder block	10-01	18
GASKET SET, carburetor	12-04	36
GASKET SET, engine overhaul	10-01	18
GASKET SET, engine valve job	10-01	18
GASKET SET, manifold	10-19	29
GASKET SET, oil pan	10-14	26
GASKET SET, oil pump	10-13	24
GASKET SET, rear axle	21-01	78
GATE, tail, assembly	31-08	108
GAUGE, fuel assembly	12-02	36
GAUGE, heat indicator, assembly	16-02	63
GAUGE, oil pressure, assembly	16-03A	63
GEAR, drive, rear power take-off	35-04	115
GEAR, driven	10-13	25
GEAR, intermediate	18-05	71
GEAR, output clutch shaft	18-04	71
GEAR, power take-off drive	35-03	115
GEAR, reverse, idler, assembly	17-04	67
GEAR, ring flywheel	10-21	29
GEAR, side	20-03	73
GEAR, side, differential case	22-03	80
GEAR, speedometer drive	16-04	64
GEAR, steering W/O wheel, assembly	23-02	85
GEAR, timing, crankshaft	10-11A	24
GEAR, transfer case main shaft	18-03	71
GEAR, transmission countershaft cluster	17-05	67
GEAR, transmission main drive	17-02	64
GEAR, transmission main shaft, assembly	17-03	67
GEAR and PINION SET, axle drive, formate type	22-03	82
GEAR and PINION SET, axle drive, generated type	22-03	80
GEAR and PINION SET, (matched set)	35-06	117
GEAR SET, formate type matched drive gear and pinion	20-03	73
GLASS, windshield	31-11	110
GOVERNOR ASSEMBLY	35-08	120
GROMMET, 5/8"	15-07	53
GROMMET, (cable through housing)	15-09	58
GROMMET, dash	35-08	120
GROMMET, fuel tank filler neck	12-01	36
GROMMET, gearshift	35-02	113
GROMMET, rubber, 3/16"	10-17	28
GROMMET, transfer case gearshift	31-10	109
GUARD, front wheel brake hose, assembly	24-07	92
GUARD, radiator, assembly	14-03	49
GUARD and BRACKET, propeller shaft, assembly	35-27	132
GUIDE, axle shaft	21-05	80
GUIDE, engine exhaust valve	10-08	23
GUIDE, engine intake valve	10-08	23
GUSSETT, frame rear cross member	26-01	95
GUSSETT, front bumper, lower	32-01	112
GUSSETT, front bumper, upper	32-01	112
H		
HANDLE, door	35-17B	128
HANDLE, operating	24-01	87
HANDLE, ratchet, windshield ventilator lid	31-11	110
HANDLE, spark plug wrench	33-01	112
HANDLE, windshield frame	31-11	110
HANDLE and KNOB, windshield wiper assy.	31-13A	111
HANDLE and PIN, door, assembly	35-17	126
HANDLE and RATCHET TUBE, emergency brake, assembly	24-01	87
HANDLE and WIRE, governor control, assy.	35-08	121
HARNESS, body wiring	15-07	53
HARNESS, chassis wiring	15-07	54
HARNESS, generator to voltage regulator	15-07	55
HARNESS, wiring, assembly	35-31	132
H		
HARNESS, wiring, generator to voltage regulator	15-07	57
HEAD, cylinder	10-02	18
HEADLIGHT, assembly	15-09	57
HEATER, assembly	35-18	128
HINGE, accelerator treadle	12-08	41
HINGE, hood, assembly	30-01	102
HINGE, tail gate, body	31-08	108
HINGE, windshield ventilator lid, assembly	31-11	110
HOOD ASSEMBLY	30-01	102
HOOD, instrument panel light	15-11	60
HOOK, pintle	35-15	125
HORN, air, assembly	12-04	36
HORN, air cleaner	12-05	40
HORN, assembly	15-17	61
HOSE, air cleaner tube to air cleaner (flexible)	12-05	40
HOSE, air cleaner tube to oil filler tube	12-05	40
HOSE, brake, assembly	24-07	92
HOSE, heater	35-18	128
HOSE, radiator inlet	14-02	49
HOSE, radiator outlet	14-02	49
HOSE, tee to wiper	35-34	133
HOSE, windshield wiper	31-13	111
HOSE, windshield wiper, 3" long	35-34	133
HOUSING, control, transmission	17-06B	68
HOUSING, flywheel, assembly	10-22	30
HOUSING, headlight, assembly	15-09	58
HOUSING, headlight, tell-tale light	15-11A	60
HOUSING, power take-off drive	35-03	115
HOUSING, pulley support, assembly	35-06	117
HOUSING, steering gear, assembly	23-02	86
HOUSING, tail and stop light, assembly	15-09B	60
HOUSING and CABLE, parking light, assy.	15-09A	58
HOUSING and TUBE, axle, assembly	20-02	73
HOUSING and TUBE, semi-floating rear axle, assembly	22-02	80
HUB, rear	25-02	95
HUB, transmission intermediate and high clutch	17-03	67
HUB, winch drive shaft, assembly	35-21	129
HUB and BEARING CUPS, front and rear	25-02	95
HUB and DRUM, front wheel, assembly	25-02	95
HUB and DRUM, rear wheel, assembly	25-02	95
I		
IMPELLER, water pump	14-04	49
INSTALLATION, propeller shaft guards	35-27	131
INSTRUCTIONS, installation	35-21	129
INSULATOR, carburetor to choke valve	12-04	38
INSULATOR, contact tip, tell-tale light	15-11A	60
INSULATOR, engine support, assembly	10-23	30
INSULATOR, generator support	15-01	51
INSULATOR, muffler support	13-01	46
INSULATOR, remote control shift rod	17-07	64
INSULATOR, transfer case support	18-09	72
INTERLOCK, shift rod	18-07	72
J		
JACK, screw type	33-01	112
JET, idle well	12-04	38
JET, low speed, assembly	12-04	38
JET, oil, timing gear	10-02	18
JET, pump	12-04	38
JET and GASKET, metering rod, assembly	12-04	38
JOINT, ball, assembly	35-08	121
JOINT, universal, winch drive, assembly	35-21	131
JOURNAL, assembly	19-02	73
K		
KEY, blank	15-05A	52
KEY, heat control lever	10-20	29
KEY, ignition lock cylinder	15-05	51
KEY, ignition switch	15-05A	52
KEY, parl, worm gear shaft to capstan	35-21	131
KEY, rear axle shaft	22-05	82
KEY, spare wheel lock cylinder	31-09B	109
KEY, woodruff, No. 7	35-21	129

Description	Group No.	Page No.
K		
KEY, woodruff, No. 9	10-03	19
KEY, woodruff, No. 13	10-11	24
KEY, woodruff, 3/16" x 7/8"	17-07	69
KIT, adapter, engine mounting	10-23	30
KIT, bearing, steering gear	23-02	86
KIT, body step	35-11	123
KIT, brake master cylinder	24-06	91
KIT, capstan winch	35-21	129
KIT, chaff screen and brush guard lower deflector	35-12	124
KIT, companion flange pulley	35-24	131
KIT, crankshaft and dowel bolt	10-03	19
KIT, diaphragm repair	12-09	44
KIT, differential gear repair	20-03	73
KIT, differential case gears	22-03	82
KIT, draw bar	35-01	113
KIT, drive gear and pinion repair	20-03	73
KIT, dual tail and stop light	35-31	132
KIT, dual windshield wiper	35-34	133
KIT, element and gasket, oil filter	10-16A	27
KIT, flywheel and dowel bolt	10-21	29
KIT, fog lights, complete	35-36	133
KIT, frame for service as replacement for frame	26-01	97
KIT, front body top	35-17	125
KIT, front bumper bar weight	35-13	124
KIT, front end conversion	35-07	119
KIT, front passenger seat	35-19	128
KIT, front power take-off	35-02	113
KIT, front wheel brake cylinder	24-05	89
KIT, front wheel universal joint	20-06	76
KIT, fuel pump	12-09	42
KIT, gasoline filter	35-40	134
KIT, governor	35-08	119
KIT, heater	35-18	128
KIT, high altitude cylinder head	35-28	132
KIT, pintle hook	35-15	125
KIT, power take-off, complete, assembly	35-02	113
KIT, propeller shaft guards	35-27	131
KIT, propeller shaft universal joint	35-05	117
KIT, pulley drive	35-06	117
KIT, radiator brush guard deflector	35-12A	124
KIT, rear body top	35-10	122
KIT, rear passenger seat	35-09	121
KIT, rear power take-off	35-02	113
KIT, rear view mirror	35-32	133
KIT, rear wheel brake cylinder	24-05	89
KIT, repair, brake master cylinder	24-06	91
KIT, repair, carburetor	12-04	38
KIT, repair, oil pump	10-13	25
KIT, repair, water pump	14-04	50
KIT, spare wheel lock	31-09B	109
KIT, spark plug and coil wires	15-06	52
KIT, spot light	35-43	134
KIT, starting crank and crank nut	35-20	129
KIT, tail gate spare wheel carrier	35-14	125
KIT, tools, deluxe	35-49	134
KIT, universal joint journal	19-02	73
KIT, valve, heat control, manifold	10-20	29
KIT, waterproofing, spark plug	35-50	134
KNOB, control, governor clutch	35-08	120
KNOB, plunger and wire, choke control assy.	12-06	41
KNOB, windshield adjusting arm	31-11	110
KNOB with SET SCREW, light switch, assy.	15-12A	60
KNUCKLE, steering	20-07	77
KNUCKLE and ARM, steering	20-07	77
L		
LAMP, 6-8V., Mazda No. 51, headlight high-beam	15-08	57
LEAF, front spring	27-01	99
LEAF, rear spring	27-02	99
LEG, driver's seat	31-09	108
LENS	15-09B	60
LENS, parking light	14-03	49
LEVER, cam	24-01	87
LEVER, clutch, assembly	35-08	120
LEVER, clutch control	11-02	33
L		
LEVER, control, transmission gearshift	17-06B	68
LEVER, counterweight	10-20	29
LEVER, front wheel drive shift	18-06	71
LEVER, manual control	35-08	120
LEVER, pivot, governor	35-08	120
LEVER, power take-off shift	35-03	115
LEVER, pump operating, assembly	12-04	38
LEVER, release, clutch assembly	11-01	31
LEVER, remote control	17-07	69
LEVER, shift, front wheel drive	18-06	71
LEVER, shift, low and reverse, assembly	17-06	67
LEVER, throttle, assembly	12-04	38
LEVER, transmission shift, high and intermediate	17-06	67
LEVER, transmission shift, low and reverse	17-06	67
LEVER, underdrive and direct shift	18-06	71
LEVER and BRACKET, choke, assembly	12-04	38
LEVER and BUSHING, emergency brake operating assembly	24-01	87
LEVER and CLUTCH, remote control, second and high	17-07	69
LEVER and TUBE, clutch control, assembly	11-02	33
LEVERSHAFT, steering gear, assembly	23-02	86
LID, tool box, assembly	33-02	112
LID, ventilator, windshield, assembly	31-11	110
LIGHT, compartment, under hood	35-46	134
LIGHT, curtain window	35-10	122
LIGHT, door window	35-17	126
LIGHT, fog, assembly	35-36	134
LIGHT, headlight tell-tale, assembly	15-11A	60
LIGHT, instrument panel, assembly	15-11	60
LIGHT, parking, assembly	15-09A	58
LIGHT, tail and stop, assembly	15-09B	59
LIGHT and CABLE, headlight tell-tale, assembly	15-11A	60
LINE, fuel tank to flexible connection, assy.	12-03	36
LINER, body sill	31-02	103
LINER, hood, radiator guard	14-03	49
LINING, brake shoe, forward	24-03	89
LINING, brake shoe, reverse	24-03	89
LINING, emergency brake	24-01	88
LINING SET, brake shoe	24-03	89
LINING SET, emergency brake W/rivets	24-01	88
LINK, accelerator connection, assembly	12-08	41
LINK, choke	12-04	38
LINK, emergency brake operating lever	24-01	88
LINK, fuel and vacuum pump	12-09A	46
LINK, fuel pump rocker arm	12-09	44
LINK, pump connector	12-04	38
LINK, tail gate chain	31-08	108
LOCK, center, windshield, assembly	31-11	110
LOCK, engine valve spring lower retainer	10-08	23
LOCK, governor clutch	35-08	120
LOCK, rear seat leg	35-09	121
LOCK, spare wheel, assembly	31-09B	109
LOCK, tail gate, body half	31-08	108
LOCKWASHER, No. 8	12-02	36
LOCKWASHER, No. 10	10-17	27
LOCKWASHER, No. 12	15-17	61
LOCKWASHER, 1/4"	10-22	30
LOCKWASHER, 5/16"	10-13	24
LOCKWASHER, 3/8"	10-02	18
LOCKWASHER, 7/16"	10-22	30
LOCKWASHER, 1/2"	10-03	19
LOCKWASHER, attaching, throttle lever	12-04	38
LOCKWASHER, cap screw	35-08	121
LOCKWASHER, dowel bolt	10-03	19
LOOM, 3/16" I.D. x 9 1/2" long, headlight cable	15-07	55
LOOM, fuel line	12-03	36
LOOP, footman	14-03	49
LOOP, top bow spacer support	31-11	111
LUBRICANT, capstan winch drive	35-21	129
M		
MANIFOLD, exhaust, assembly	10-19	29
MANIFOLD, intake, assembly	10-19	29
MATERIAL, duck, 36" wide, for rear top	35-10A	123
MIRROR, rear view, assembly	31-15	111

Description	Group No.	Page No.
M		
MOTOR, windshield wiper, 120° cleaning arc	35-34	133
MOTOR, windshield wiper vacuum	31-13	111
MUFFLER, assembly	13-01	46
N		
NEEDLE, spring and seat, assembly	12 04	38
NIPPLE, heater	35-18	128
NIPPLE, hex., 1/8" pipe	35-40	134
NOZZLE, carburetor	12-04	38
NUT, acorn, No. 10-24	35-10	122
NUT, No. 10-32	31-11	110
NUT, battery clamp bolt	15-18A	62
NUT, 1/4"-28	31-11	110
NUT, clinch, No. 10-24	31-05	106
NUT, clinch, 1/4"-20	31-03	106
NUT, clinch, 5/16"-18	31-06	107
NUT, clinch, 5/16"-24	26-01	95
NUT, clinch, 3/8"-16	31-03	106
NUT, clinch, 3/8"-24	26-01	95
NUT, connecting rod cap bolt	10-05	21
NUT, crankshaft pulley	10-03	20
NUT, cross steering tie rod stud	23-01	84
NUT, dowel bolt	10-03	19
NUT, flange stud	12-04	38
NUT, fuel filter clamp	35-40	134
NUT, grommet, 1/4"-28	26-01	97
NUT, headlight adjusting screw	15-09	58
NUT, heat indicator gauge to plug to cylinder head	16-02	63
NUT, horn button	15-17A	62
NUT, huglock, 3/8"-16	35-14	125
NUT, hex., No. 8-32	14-03	49
NUT, hex., No. 10-24	10-20	29
NUT, hex., No. 10-32	12-02	36
NUT, hex., No. 12-24	15-17	61
NUT, hex., 1/4"-20	15-04	51
NUT, hex., 1/4"-28	12-05	41
NUT, hex., 5/16"-18	13-01	46
NUT, hex., 5/16"-24	10-13	24
NUT, hex., 3/8"-16	26-01	95
NUT, hex., 3/8"-24	10-12	24
NUT, hex., 7/16"-14	11-02	35
NUT, hex., 7/16"-20	10-02	18
NUT, hex., 1/2"-13	35-15	125
NUT, hex., 1/2"-20	10-23	30
NUT, hex., 9/16"-18	27-03	100
NUT, hex., 5/8"-18	23-01	84
NUT, hex., 11/16"-32	15-11	60
NUT, hex., 3/4"-16	35-01	113
NUT, hex., 3/4"-20	18-04	71
NUT, hex., 1"-32	15-05A	52
NUT, inverted flared tube, 1/4"	12-03	36
NUT, inverted flared tube	24-07	93
NUT, lock, 5/16"-18	31-02	104
NUT, lock, 3/8"-24	31-02	104
NUT, lock, clutch adjusting screw	11-01	31
NUT, metering rod pin	12-04	38
NUT, mounting, 7/16"-28	15-12A	60
NUT, operating lever	24-01	88
NUT, pinion	20-03	73
NUT, rear axle shaft	22-05	82
NUT, spare wheel lock	31-09B	109
NUT, spare wheel to carrier stud	25-01	94
NUT, speed, No. 10-24	11-02	33
NUT, speed, 5/16"	29-01A	102
NUT, sq., No. 10-32, brake tube clamp screw	24-07	92
NUT, sq., 1/4"-20	35-14	125
NUT, sq., 5/16"-18	14-03	49
NUT, stamped, 5/16"-24	12-01	36
NUT, starting switch terminal	15-13	61
NUT, steering connecting rod bell crank	23-01	84
NUT, tee, 5/16"-24	31-09	108
NUT, transmission main shaft	17-03	67
NUT, tube clamp screw	12-04	38
NUT, welding, No. 12-24	31-10	109
NUT, welding, 5/16"-24	31-09	108
NUT, welding, sq., 5/16"-18	31-03	106
NUT, wheel bearing retaining	25-03	95
N		
NUT, wheel brake anchor pin	24-04	89
NUT, wing, 5/16"-18	15-18	62
NUT, wing, speedometer to bracket	16-04	64
NUT and PIN, crankshaft, assembly	10-03	19
O		
OIL, general use	35-54	135
OIL, penetrating	35-54	135
OIL SEAL, axle shaft carrier end	22-05	82
OIL SEAL, capstan drive worm	35-21	131
OIL SEAL, crankshaft, front end	10-03	20
OIL SEAL, drive pinion	20-04	75
OIL SEAL, front bearing	35-08	121
OIL SEAL, fuel pump	12-09	43
OIL SEAL, fuel pump body	12-09A	46
OIL SEAL, governor	35-08	120
OIL SEAL, governor operating shaft	35-08	120
OIL SEAL, input and output shaft	35-04	115
OIL SEAL, pulley drive	35-06	117
OIL SEAL, shift rod	18-01	69
OIL SEAL, steering knuckle, carrier end	20-07	77
OIL SEAL, steering knuckle, half, assembly	20-07	77
OIL SEAL, transmission main drive gear bearing retainer	17-02	64
OIL SEAL, transmission main shaft	17-03	67
OIL SEAL, transmission shift shaft	17-06	67
OIL SEAL, wheel hub grease, assembly	25-03	95
OIL SEAL SET, transfer case	18-01	69
OIL SEAL and GASKET SET, steering gear housing	23-02	86
OUTRIGGER, body, assembly	26-01	95
P		
PACKING, bearing cap, rear	10-01	18
PACKING, crankshaft	10-01	18
PAD, brake pedal, assembly	24-08	93
PAD, clutch pedal, assembly	11-02	33
PAD, draft, clutch pedal	11-02	33
PAD, felt, clutch control tube	11-02	33
PADDING, windshield glass	31-12	111
PAN, driver's seat, assembly	31-09	108
PAN, floor assembly	31-03	106
PAN, front floor and dash panel, assembly	31-03	106
PAN, oil assembly	10-14	26
PAN and FLOOR PLATES, front floor, assy	31-03	106
PANEL, body assembly	31-07	107
PANEL, body side, wheelhouse, sub-assembly	31-07	107
PANEL, cowl, assembly	31-06	107
PANEL, dash, assembly	31-05	106
PANEL, front floor and dash, assembly	31-03	106
PANEL, front seat back	31-09	108
PANEL, instrument, assembly	31-06	107
PANEL, side, cowl, assembly	31-06	107
PANEL, top, cowl, assembly	31-06	107
PANEL, wheelhouse, assembly	31-04	106
PEDAL, brake, assembly	24-08	93
PEDAL, clutch, assembly	11-02	33
PILOT, universal joint	20-06	76
PIN, 3/16" x 37/64"	17-06B	68
PIN, accelerator treadle hinge	12-08	41
PIN, axle shaft universal joint	20-05	75
PIN, clevis, 1/4", governor cable to governor	35-08	120
PIN, clevis, 5/16", brake cable to operating lever	24-01	88
PIN, clevis, 5/16" x 27/32"	11-02	35
PIN, clevis shift rod to transmission	17-07	69
PIN, clutch release lever	11-01	31
PIN, cotter, 1/16" x 5/8"	12-08	41
PIN, cotter, 1/16" x 1/2"	12-08	41
PIN, cotter, 1/8" x 3/8", bell crank nut to shaft	23-01	84
PIN, cotter, 1/8" x 3/4"	24-01	88
PIN, cotter, 1/8" x 7/8", flange drive to gear nut	35-03	115
PIN, cotter, 1/8" x 1", washer to control shaft	17-07	69
PIN, cotter, 1/8" x 1 1/4", float to support	10-15	26
PIN, cotter, 1/8" x 1 3/4", ball seat plugs	23-01	84

Description P	Group No.	Page No.
PIN, cotter, 3/32" x 1/2"	11-02	35
PIN, cotter, 3/32" x 5/8"	17-07	69
PIN, cotter, 3/32" x 7/8"	23-01	83
PIN, cotter, 3/32" x 3/4", eye bolt	24-06	91
PIN, cotter, 3/32" x 1"	27-03	100
PIN, cotter, 5/32" x 1 3/8"	11-02	35
PIN, cotter, drive pinion nut	22-04	82
PIN, driven gear	10-13	25
PIN, dowel, 3/16" x 9/32", bracket to steering column	17-07	69
PIN, float lever	12-04	38
PIN, fuel and vacuum pump rocker arm	12-09A	46
PIN, fulcrum, remote control lever	17-07	69
PIN, governor manual lever	35-08	120
PIN, governor weight	35-08	120
PIN, hood hinge	30-01	102
PIN, intake needle	12-04	38
PIN, king pin lock	20-07	78
PIN, lock, steering connecting rod bell crank	23-01	84
PIN, metering rod	12-04	38
PIN, pinion shaft lock	20-03	73
PIN, piston	10-06	21
PIN, pivot, front passenger seat	35-19A	129
PIN, pivot, windshield ventilator lid ratchet	31-11	111
PIN, power take-off shift lever	35-03	115
PIN, rocker arm	12-09	43
PIN, shift fork	17-06A	67
PIN, shift lever pivot	18-06	71
PIN, shock absorber to bracket	28-01	101
PIN, steering connecting rod bell crankshaft lock	23-01	84
PIN, straight	35-21	131
PIN, straight, 3/8" x 1 7/8"	35-06	117
PIN, tail gate hinge	31-08	108
PIN, tool box lid hinge	33-02	112
PIN, transmission shift shaft, taper	17-06	67
PIN, trunnion, propeller shaft universal joint	35-05	117
PIN, universal joint pilot	20-06	76
PIN, wheel brake anchor	24-04	89
PINION	10-13	25
PINION, differential case	22-03	82
PINION, mate	20-03	73
PIPE, exhaust, assembly	13-01	46
PIPE, muffler tail	13-01A	48
PISTON, master cylinder, assembly	24-06	92
PISTON and PIN, less rings, assembly	10-06	21
PISTON and SHOE GUIDE, wheel brake cylinder, assembly	24-05	89
PIVOT, seat hinge	35-19	128
PLANT, power, assembly	10-01	18
PLATE, back, clutch, assembly	11-01	31
PLATE, backing, assembly	24-01	88
PLATE, cover, steering column toe board	31-10	109
PLATE, cover, transmission floor plate	31-10	109
PLATE, draw bar, assembly	35-01	113
PLATE, engine, assembly	10-23	31
PLATE, face, governor control plunger, assy.	35-08	121
PLATE, fuel pump cover	12-09A	46
PLATE, filler, fuel tank, assembly	31-07	107
PLATE, gear box cover, assembly	35-21	131
PLATE, gear shift lever housing cover	31-10	109
PLATE, idler and countershaft lock	17-05	67
PLATE, ignition switch	15-05A	52
PLATE, insulator	35-27	132
PLATE, intermediate lock	18-05	71
PLATE, lock idler and countershaft	17-05	67
PLATE, master cylinder piston stop	24-06	92
PLATE, mounting, assembly	35-21	129
PLATE, muffler support insulator	13-01	47
PLATE, parking light mounting	15-09A	59
PLATE, power take-off drive housing shift lever	35-03	115
PLATE, power take-off lever retainer	35-03	115
PLATE, power take-off shift cover	31-10	109
PLATE, pressure, clutch	11-01	31
PLATE, radiator chaff screen retaining bracket	35-12	124
PLATE, reinforcement, frame rear	26-01	95
PLATE, retainer, carburetor lever	12-04	38
PLATE, retaining, cover	35-02	113
PLATE, rub	35-17A	127
PLATE, skid, under frame	26-01	95
PLATE, stud, assembly	29-01A	102
PLATE, synchronizer shifting	17-03	67
PLATE, tapping, hood hinge	31-06	107
PLATE, tapping, windshield clamp catch	31-11	110
PLATE, tapping, windshield pivot bracket	31-11	111
PLATE, thrust, camshaft	10-11A	24
PLATE, top bow W/storage bolt, assembly	31-11	110
PLATE, transmission floor	31-10	109
PLATE, wheel brake anchor pin	24-04	89
PLATE, wheel brake backing, assembly	24-04	89
PLATE and HUB, driven, clutch, assembly	11-01	31
PLATE and SHAFT, spring clip, rear, assy.	21-01	78
PLATE and SHAFT, spring clip and shock absorber, assembly	27-03	101
PLIERS, combination, slip joint	33-01	112
PLUG, axle housing drain	20-02	73
PLUG, axle housing filler	20-02	73
PLUG, connecting, tail light	15-07A	57
PLUG, cover	10-13	25
PLUG, drain	10-14	26
PLUG, drain 1/2" Pipe, sq. hd.	17-01	64
PLUG, drain, front floor pan	31-03	106
PLUG, drain, oil filter	10-16A	27
PLUG, expansion, 3/4"	10-22	30
PLUG, expansion, 1 1/4"	10-02	18
PLUG, expansion, 1 3/4"	10-11	24
PLUG, expansion, propeller shaft yoke	19-02	73
PLUG, expansion, pulley	35-08	120
PLUG, filler, 3/4" pipe, sq. hd.	35-06	117
PLUG, filler, capstan gear box	35-21	131
PLUG, governor body	35-08	120
PLUG, nozzle retainer	12-04	38
PLUG, oil drain, governor	35-08	120
PLUG, oil filler, governor	35-08	120
PLUG, oil level, governor	35-08	120
PLUG, operating shaft body	35-08	120
PLUG, pipe	35-08	121
PLUG, pipe, 1/8", slotted	10-02	18
PLUG, pipe, 1/8", sq. hd.	10-02	18
PLUG, pipe, 3/8", countersunk	10-02	19
PLUG, pipe, 3/8", sq. hd.	14-04	50
PLUG, pipe, slotted	35-08	120
PLUG, rivet, idle passage	12-04	38
PLUG, rivet, idle port	12-04	38
PLUG, shift rod poppet	18-07	72
PLUG, spark, with gasket, assembly	15-06	52
PLUG, sq. hd., 1/4"	10-19	29
PLUG, steering connecting rod ball seat adjusting	23-01	84
PLUG, taper, 3/8"	17-06A	67
PLUG, transfer case drain	18-02	71
PLUG, transmission case, taper	17-01	64
PLUG and GASKET, low speed jet and idle well passage, assembly	12-04	38
PLUG and GASKET, pump jet and nozzle passage, assembly	12-04	38
PLUG and GASKET, strainer passage, assy.	12-04	38
PLUG and TUBE, steering gear oil seal	23-02	86
PLUG with GASKET, spark, assembly	15-06	52
PLUNGER, interlock, transmission gear shift	17-06A	67
PLUNGER, oil relief	10-13	25
PLUNGER, thrust, camshaft	10-11	24
PLUNGER and ROD, pump, assembly	12-04	38
POLISH, chrome	35-54	135
POWER TAKE-OFF, assembly	35-02	113
POWER TAKE-OFF, rear unit, less shield, assembly	35-04	115
PRIMER, black, air dry	34-01	113
PRIMER, synthetic surfacer	34-01	113
PROTECTOR, rear brake grease	25-03A	95
PULLEY, assembly	35-08	120
PULLEY, belt	35-06	117
PULLEY, companion flange, 6 3/8" O.D., 4 V-type grooves	35-24	131
PULLEY, crankshaft	10-03	20

Description	Group No.	Page No.
P		
PULLEY, drive, fan and governor, assembly	35-21	129
PULLEY, drive, governor	35-08	121
PULLEY, fan and water pump	14-05	50
PULLEY, governor, assembly	35-08	120
PUMP, fuel, assembly	12-09	42
PUMP, fuel and vacuum, assembly	12-09A	44
PUMP, oil, assembly	10-13	24
PUMP, tire, assembly	33-01	112
PUMP, water, assembly	14-04	49
PURIFIER, gasoline	35-40	134
R		
RACE, inner, universal joint	20-06	76
RAIL, quarter, rear top bow	35-10A	123
RAIL, shift, high and intermediate	17-06A	67
RAIL, shift, low and reverse	17-06A	67
RAIL, top, assembly	35-17B	127
REFLECTOR, reflex, assembly	15-19	63
REINFORCEMENT, frame cross member, rear	35-04	115
REINFORCEMENT, frame, front bumper	32-01	112
REINFORCEMENT, frame, rear	26-01	95
REINFORCEMENT, mounting, horn	15-17	61
REINFORCEMENT, pintle hook frame	35-15	125
REINFORCEMENT, rear cross member	35-02	113
REINFORCEMENT, tail gate panel	35-14	125
REST, accelerator foot, assembly	12-08	41
RETAINER, axle shaft	20-06	76
RETAINER, axle shaft, grease outboard, assembly	25-03A	95
RETAINER, clutch control tube	11-02	35
RETAINER, crankshaft packing	10-03	20
RETAINER, curled hair filter	12-09A	46
RETAINER, door curtain, assembly	31-11	111
RETAINER, door curtain to cowl side panel	31-11	111
RETAINER, engine valve spring, lower	10-08	23
RETAINER, fuel and vacuum pump screen	12-09A	46
RETAINER, license plate window	15-09B	60
RETAINER, master cylinder check valve cup	24-06	92
RETAINER, nut 5/16"-18 square nut	14-03	49
RETAINER, oil relief spring	10-13	25
RETAINER, pedal shaft	24-08	93
RETAINER, power take-off bearing, assy.	35-04	115
RETAINER, pulley hub oil	35-06	117
RETAINER, rear axle shaft bearing	22-05	82
RETAINER, spring	12-04	38
RETAINER, spring shackle grease seal	27-03	101
RETAINER, storage, center top bow	31-11	110
RETAINER, thermostat	14-06	50
RETAINER, tool box lid lifting ring	33-02	112
RETAINER, transmission main drive gear bearing	17-02	64
RETAINER, trunnion gasket	19-02	73
RETAINER and PILOT, power take-off oil seal, assembly	35-04	115
RIM and DISC, 15 x 4.50, assembly	25-01	94
RING, compression, second groove	10-07	22
RING, compression, top groove	10-07	22
RING, fastening, trim	31-09	108
RING, horn contact, assembly	15-17A	62
RING, lifting, tool box lid	33-02	112
RING, oil regulating, third groove	10-07	22
RING, retaining, gear cover packing	10-12	24
RING, retaining, governor shaft bearing	35-08	120
RING, retaining, low speed shaft	35-21	131
RING, retaining, pulley bearing	35-08	120
RING, retaining, release lever pin	11-01	31
RING, retaining, worm and gear set	35-21	131
RING, sealed beam unit mounting	15-09	58
RING, steering gear cam steel balls retaining	23-02	86
RING, synchronizer blocking	17-03	67
RING, transfer case shift lever grommet	31-10	109
RING and RING RETAINER, tool box lid	31-04	106
RING and SPRING SET	10-07A	22
RING SET	10-07	22
RISER, front to rear floor, assembly	31-04	106
RISER, governor shaft	35-08	120
RIVET, clutch facing to driven plate	11-01	31
R		
RIVET, fil. hd., 1/8" x 3/8"	33-02	112
RIVET, fil. hd., 5/16" x 3/4", support to frame	15-18	62
RIVET, fl. hd., 3/8" x 3/4"	26-01	95
RIVET, fl. hd., 5/32" x 3/8", bracket and spring to screen	35-12	124
RIVET, fl. hd., 5/32" x 7/16", bracket and plate to screen	35-12	124
RIVET, ov. hd., 1/8" x 7/16", split	35-10	122
RIVET, ov. hd., 9/64" x 7/16"	14-03	49
RIVET, rd. hd., 1/8" x 1/4", retainer to lid	33-02	112
RIVET, rd. hd., 1/8" x 5/16"	31-04	106
RIVET, rd. hd., 1/8" x 3/8"	31-04	106
RIVET, rd. hd., 1/4" x 3/8", brace to dash panel	31-05	106
RIVET, rd. hd., 1/4" x 1/2", gussett to diagonal cross sill	31-05	106
RIVET, rd. hd., 3/16" x 1 1/4"	35-09	121
RIVET, rd. hd., 1/4" x 11/16", support to dash panel	24-01	88
RIVET, rd. hd., 5/16" x 3/4"	10-23	30
RIVET, rd. hd., 3/8" x 3/4"	10-23	30
RIVET, rd. hd., 3/8" x 7/8"	26-01	95
RIVET, rd. hd., 5/32" x 3/16", catch to lid	33-02	112
RIVET, tubular, brass, 5/16" x .099, lining to shoe	24-01	88
RIVET, tubular, brass, lining to shoe	24-03	89
ROD, clutch release pedal	11-02	35
ROD, connecting	35-08	121
ROD, connecting, less bearings, assembly	10-05	21
ROD, connecting, steering, assembly	23-01	84
ROD, front wheel drive shift	18-07	71
ROD, governor to carburetor, assembly	35-08	121
ROD, metering	12-04	38
ROD, metering carburetor	35-28	132
ROD, push, master cylinder	24-06	92
ROD, radiator brace	14-01	48
ROD, shift, capstan winch	35-21	129
ROD, side curtain, front, assembly	35-17	126
ROD, starter, assembly	15-13A	61
ROD, steering tie, assembly	23-01	84
ROD, throttle, assembly	12-08	41
ROD, throttle, connector	12-04	38
ROD, transmission remote control shift, first and reverse, assembly	17-07	69
ROD, transmission remote control shift, second and high, assembly	17-07	69
ROD, underdrive and direct shift	18-07	71
ROLLER, capstan winch rope	35-21	129
ROLLER, transmission countershaft gear bearing	17-05	67
ROLLER, transmission main shaft pilot bearing	17-03	67
RUST PREVENTATIVE, radiator	35-54	135
S		
SCREEN, chaff, radiator, assembly	35-12	124
SCREEN, fuel and vacuum pump	12-09A	46
SCREEN, fuel pump filtering, assembly	12-09	44
SCREEN, insect	35-56	135
SCREEN, insect and winter front	35-58	135
SCREW, No. 8-32 x 3/8"	15-09	58
SCREW, adjusting, clutch	11-01	31
SCREW, adjusting, thread	24-01	88
SCREW, adjusting, throttle lever	12-04	38
SCREW, adjusting, valve tappet	10-09	23
SCREW, attaching, bowl cover	12-04	38
SCREW, attaching, choke valve	12-04	38
SCREW, attaching, throttle lever	12-04	38
SCREW, bd. hd., No. 12 x 5/8"	31-11	110
SCREW, bd. hd., No. 14 x 1/2"	15-09	57
SCREW, bd. hd., 1/4"-28 x 7/8"	31-11	110
SCREW, bleeder, brake cylinder	24-05	89
SCREW, body cap	35-08	121
SCREW, choke lever bracket	12-04	38
SCREW, cover plate cap	12-09A	46
SCREW, fil. hd., No. 8-32 x 3/8"	15-09	58
SCREW, fil. hd., No. 8-32 x 9/32"	15-05A	52
SCREW, fil. hd., No. 8-32 x 3/4"	35-08	120

Description S	Group No.	Page No.
SCREW, fil. hd., No. 10-24 x ½"	12-08	41
SCREW, fil. hd., No. 10-32 x ½", cover to body	12-09	42
SCREW, fil. hd., No. 12-24 x ⅝"	10-13	24
SCREW, fl. hd., No. 8-32 x 7/16"	20-06	76
SCREW, fl. hd., No. 10-24 x ⅜"	31-07	107
SCREW, fl. hd., No. 10-24 x ½"	31-07	107
SCREW, fl. hd., ¼"-20 x ⅝", retainer to gear case	35-04	115
SCREW, fl. hd., ¼"-20 x ¾"	31-11	110
SCREW, fl. hd., ¼"-20 x ⅞", capstan to mounting plate	35-21	129
SCREW, fuel pump retainer	12-09	44
SCREW, governor bumper	35-08	120
SCREW, headless, No. 10-24 x 5/16", set	35-21	131
SCREW, hex. hd., No. 12 x ½", deflector to front cross tube	35-12	124
SCREW, hex. hd., ¼"-20 x ⅝"	10-13A	26
SCREW, hex. hd., ¼"-20 x ¾"	35-08	120
SCREW, hex. hd., 5/16"-24 x ⅝", oil seal	20-07	77
SCREW, hex. hd., ½"-13 x 1"	35-21	131
SCREW, idler adjusting	12-04	38
SCREW, junction block terminal	15-15	61
SCREW, lock, piston pin	10-06	21
SCREW, ov. hd., No. 10 x ½"	31-09	108
SCREW, pan hd., No. 10 x ½", tapping	31-11	111
SCREW, pan hd., No. 14 x ½"	31-10	109
SCREW, parking light door	15-09A	59
SCREW, pivot, windshield adjusting arm	31-11	110
SCREW, rd. hd., No. 6 x 5/16"	17-07	69
SCREW, rd. hd., No. 8 x ½", self tapping	35-17	126
SCREW, rd. hd., No. 10 x ½"	31-03	106
SCREW, rd. hd., No. 6-32 x 5/16"	12-09	42
SCREW, rd. hd., No. 6-32 x 7/16"	15-09B	60
SCREW, rd. hd., No. 8-32 x ¼"	12-02	36
SCREW, rd. hd., No. 8-32 x ⅜"	12-02	36
SCREW, rd. hd., No. 8-32 x ½"	14-03	49
SCREW, rd. hd., No. 8-32 x 1¼"	15-12	60
SCREW, rd. hd., No. 10-16 x ⅜"	15-05A	52
SCREW, rd. hd., No. 10-24 x ⅜"	10-17	27
SCREW, rd. hd., No. 10-24 x ½"	12-03	36
SCREW, rd. hd., No. 10-24 x ⅝"	15-07	52
SCREW, rd. hd., No. 10-24 x ¾"	10-20	29
SCREW, rd. hd., No. 10-24 x 1¼"	30-01	102
SCREW, rd. hd., No. 10-32 x ⅜"	31-11	110
SCREW, rd. hd., No. 10-32 x ⅝"	35-18	128
SCREW, rd. hd., No. 10-32 x ¾", coil bracket to dash	15-05	52
SCREW, rd. hd., No. 10-32 x ⅞"	31-13	111
SCREW, rd. hd., No. 10-32 x 1¼", brake tube clamp	24-07	92
SCREW, rd. hd., No. 12-24 x 7/16"	17-07	69
SCREW, rd. hd., No. 12-24 x ½"	31-10	109
SCREW, rd. hd., No. 12-24 x ⅝"	31-15	111
SCREW, rd. hd., No. 12-24 x ¾"	31-15	111
SCREW, rd. hd., ¼"-20 x ⅜"	10-22	30
SCREW, rd. hd., ¼"-20 x ½"	15-12	60
SCREW, rd. hd., ¼"-20 x ⅝"	15-04	51
SCREW, rd. hd., ¼"-28 x ⅜"	15-07A	55
SCREW, rd. hd., ¼"-28 x ½"	15-09	57
SCREW, remote control lever fulcrum pin	17-07	69
SCREW, set, 5/16"-24 x ¼", cup point	35-21	129
SCREW, sheet metal, No. 10-24 x ⅝"	12-03	36
SCREW, shift fork set	18-07	72
SCREW, shift lever pivot pin set	18-06	71
SCREW, shoulder pivot, governor	35-08	121
SCREW, socket hd., 5/16"-18, collector to case	17-05	67
SCREW, socket hd., ¼"-20 x 1¾"	35-21	131
SCREW, special hd., No. 10-32 x ⅜"	31-11	110
SCREW, steering gear adjusting	23-02	86
SCREW, tapping, clamp to windshield	31-13	111
SCREW, throttle shaft arm clamp	12-04	38
SCREW, throttle wire stop	12-07	41
SCREW, thumb, windshield pivot	31-11	110
SCREW, tube clamp	12-04	38
SCREW, valve plate	12-09A	46
SCREW, wheel brake cylinder bleeder	24-05	89
SCREW, windshield adjusting arm	31-11	110
SCREW, windshield frame corner	31-11	110
SCREW, wire clamp	12-04	38
SCREW and WASHER, No. 8-32 x 3/16"	12-04	38
SCREW and WASHER, No. 8-32 x ⅜"	12-04	38
SCREW and WASHER, attaching, air horn	12-04	38
SCREW and WASHER, attaching, bowl cover	12-04	38
SCREW and WASHER, attaching, choke tube bracket	12-04	38
SCREW and WASHER, attaching, flange to body	12-04	38
SCREW and WASHER, plate to housing	35-03	115
SEAL, bell crank bearing	23-01	84
SEAL, brake cylinder inspection cover	31-10	109
SEAL, carburetor and air cleaner horn	12-05	40
SEAL, carburetor tube clamp	12-05	40
SEAL, dust, clutch control tube	11-02	35
SEAL, floor, accelerator treadle rod, assy.	12-08	41
SEAL, grease, spring shackle	27-03	101
SEAL, power take-off shift lever	35-03	115
SEAL, radiator brush guard deflector	35-12	124
SEAL, radiator side air deflector to radiator	14-03	49
SEAL, steering column floor	31-10	109
SEAL, transmission floor plate	31-10	109
SEAL, water pump, assembly	14-04	50
SEAL, weather, distributor secondary cable	15-06	52
SEAT, diaphragm spring	12-09A	46
SEAT, driver's, assembly	31-09	108
SEAT, front passenger, assembly	35-19A	129
SEAT, master cylinder valve	24-06	92
SEAT, rear passenger, assembly	35-09	121
SEAT, steering column bearing spring	23-02	86
SEAT, steering connecting rod ball	23-01	84
SHAFT, axle drive	22-05	82
SHAFT, brake pedal, assembly	24-08	93
SHAFT, control valve	10-20	29
SHAFT, differential pinion	22-03	82
SHAFT, drive, capstan winch, assembly	35-21	131
SHAFT, inner	20-06	76
SHAFT, intermediate	18-05	71
SHAFT, low speed, worm gear	35-21	131
SHAFT, NUT and WASHER, output assy.	18-04	71
SHAFT, pinion	20-03	75
SHAFT, power take-off	35-04	115
SHAFT, propeller, power take-off, assembly	35-02	113
SHAFT, propeller, rear, assembly	19-01	73
SHAFT, remote control, assembly	17-07	69
SHAFT, reverse idler gear	17-04	67
SHAFT, speedometer tube	16-04	64
SHAFT, spline, capstan winch	35-21	129
SHAFT, steering bell crank	23-01	84
SHAFT, transmission main	17-03	64
SHAFT and CARRIER, governor, assembly	35-08	120
SHAFT and LEVER, choke control, assy.	12-04	38
SHAFT and LEVER, cross, accelerator, assy.	12-08	41
SHAFT and LEVER, throttle, assembly	12-04	38
SHAFT and ROTOR, assembly	10-13	25
SHAFT and SLEEVE, power take-off stub, assembly	35-06	117
SHAFT and UNIVERSAL JOINT, front axle, assembly	20-05	75
SHELL and HOOD HOLDER, instrument light body, assembly	15-11	60
SHIELD, air cleaner, assembly	12-05	41
SHIELD, companion flange and universal joint end yoke dust	18-04	71
SHIELD, dust, companion flange, rear	18-04	71
SHIELD, dust, frt. universal joint and yoke	19-02	73
SHIELD, fan pulley	14-05	50
SHIELD, front axle gear carrier	35-27	132
SHIELD, master cylinder, assembly	24-06	92
SHIELD, power take-off, assembly	35-02	113
SHIELD, steering connecting rod cover dust	23-01	84
SHIELD, universal joint end yoke dust	22-04	82
SHIM, axle shaft roller bearing	22-05	82
SHIM, bevel pinion adjusting	35-06	117
SHIM, crankshaft	10-03	20
SHIM, differential pinion adjusting	20-03	75

Description S	Group No.	Page No.
SHIM, drive pinion bearing adjusting	20-04	75
SHIM, king pin bearing, adjusting	20-07	78
SHIM, oil relief spring	10-13	25
SHIM, output shaft rear bearing cap	18-02	71
SHIM, pinion adjusting	35-06	117
SHIM, power take-off output shaft	35-04	115
SHIM, pulley drive pinion bearing	35-06	119
SHIM, radiator mounting	14-01	48
SHIM, steering gear housing cover	23-02	86
SHIM, universal joint adjusting	20-05	76
SHOE, transmission, low and reverse	17-06	67
SHOE and LINING, brake, assembly	24-03	89
SHOE and LINING, emergency brake, assy.	24-01	88
SHOE and LINING SET	24-03	89
SHOE and LINING SET, emergency brake	24-01	88
SHROUD, fan ring	14-01	48
SLEEVE, governor shaft	35-08	120
SLEEVE, insulator	15-07	55
SLEEVE, intermediate and high speed clutch	17-03	67
SLEEVE, power take-off, to propeller shaft	35-03	115
SLEEVE, speedometer driven gear	16-04	64
SLEEVE, transmission shift lever interlock	17-06	67
SLINGER, oil, crankshaft	10-03	20
SLINGER, oil, drive pinion bearing	20-04	75
SNAP RING, intermediate and high clutch hub	17-03	67
SNAP RING, internal	35-04	115
SNAP RING, main drive gear	17-02	64
SNAP RING, output clutch shaft bearing	18-04	71
SNAP RING, power take-off sleeve	35-06	119
SNAP RING, retainer, axle shaft	20-06	76
SNAP RING, trunnion bearing	19-02	73
SNUBBER, transfer case support insulator	18-09	72
SOCKET, cross steering tie rod, assembly	23-01	84
SOCKET, curtain fastener	35-17	126
SOCKET, door lower hinge, assembly	35-17	125
SOCKET, fastener, side curtains to body	31-07	107
SOCKET, headlight tell-tale light	15-11A	60
SOCKET and CABLE	14-03	49
SPACER, bell crank shaft bearing inner race	23-01	84
SPACER, camshaft thrust plate	10-11A	24
SPACER, conduit clamp	24-01	88
SPACER, countershaft gear bearing	17-05	67
SPACER, crankshaft sprocket	10-11	24
SPACER, drive pinion bearing	20-04	75
SPACER, drive shaft	22-03	82
SPACER, frame front intermediate cross member bracket	26-01	95
SPACER, front axle bumper	27-04	101
SPACER, front bumper gussett	32-01	112
SPACER, fuel and vacuum pump	12-09A	46
SPACER, pinion bearing	20-04	75
SPACER, pintle hook	35-15	125
SPACER, power take-off drive gear bearing	35-03	115
SPACER, pulley shaft bearing	35-06	119
SPACER, rear axle bumper to frame	27-04	101
SPACER, safety chain eyebolt	35-15	125
SPACER, shock absorber	28-01	101
SPACER, snow plow bolt	26-01	95
SPACER, steering gear to frame bolt	23-02	86
SPACER, step to front floor pan	29-01A	102
SPACER, tail gate panel to tire carrier brkt.	35-14	125
SPACER, transmission main shaft bearing	17-03	67
SPACER, vacuum pump link	12-09A	46
SPACER, winch drive	35-21	129
SPEEDOMETER ASSEMBLY	16-04	64
SPINDLE and BUSHING, wheel bearing, assembly	20-07	78
SPRING	35-08	121
SPRING, accelerator cross shaft	12-08	41
SPRING, accelerator treadle hinge	12-08	41
SPRING, air cleaner toggle	12-05	41
SPRING, bi-metal	10-20	29
SPRING, camshaft thrust plunger	10-11	24
SPRING, choke pull back	12-04	38
SPRING, clutch control tube	11-02	35
SPRING, clutch pedal shank draft pad	11-02	35
SPRING, clutch release bearing carrier	11-02	35
SPRING, clutch release lever	11-01	31
SPRING, connector link	12-04	38
SPRING, connector rod	12-04	38
SPRING, contact tip, tell-tale light	15-11A	60
SPRING, diaphragm	12-09A	46
SPRING, distributor shaft friction	15-03	51
SPRING, driver's seat back, assembly	31-09	108
SPRING, driver's seat cushion, assembly	31-09	108
SPRING, element retainer	12-05	41
SPRING, engine valve	10-08	23
SPRING, front, assembly	27-01	98
SPRING, front seat cushion, assembly	31-09	108
SPRING, front wheel brake cylinder	24-05	89
SPRING, fuel and vacuum pump drain cup	12-09A	46
SPRING, fuel and vacuum pump rocker arm	12-09A	46
SPRING, fuel pump diaphragm	12-09	44
SPRING, fuel pump rocker arm return	12-09	44
SPRING, governor	35-08	120
SPRING, governor bumper	35-08	120
SPRING, governor clutch	35-08	120
SPRING, headlight mounting ring	15-09	58
SPRING, heat control valve	10-20	29
SPRING, horn button	15-17A	62
SPRING, idle adjustment screw	12-04	38
SPRING, instrument light wire lead	15-11	60
SPRING, intake needle	12-04	38
SPRING, lens retainer	15-09B	60
SPRING, main, governor	35-08	121
SPRING, metering rod	12-04	38
SPRING, oil filter cover bolt	10-16A	27
SPRING, oil relief plunger	10-13	25
SPRING, operating lever spacer	24-01	88
SPRING, pin	12-04	38
SPRING, plunger	12-04	38
SPRING, poppet	35-21	131
SPRING, pressure clutch	11-01	31
SPRING, pressure plate	11-01	31
SPRING, propeller shaft compensating	35-05	117
SPRING, pump	12-04	38
SPRING, ratchet tube	24-01	88
SPRING, rear, assembly	27-02	99
SPRING, rear seat back, assembly	35-09	121
SPRING, rear seat cushion, assembly	35-09	121
SPRING, rear wheel brake cylinder cup	24-05	89
SPRING, remote control cross shift bias	17-07	69
SPRING, remote control lever anti-rattle	17-07	69
SPRING, retainer and check valve, master cylinder	24-06	92
SPRING, retaining, radiator chaff screen	35-12	124
SPRING, retracting	12-08	41
SPRING, retracting, clutch pedal	11-02	35
SPRING, retracting, hand brake	24-01	88
SPRING, retracting, starter control arm	15-13A	61
SPRING, return, clutch pressure plate	11-01	31
SPRING, shift lever	18-06	71
SPRING, shift rail poppet	17-06A	67
SPRING, shift rod poppet	18-07	72
SPRING, shoe return	24-01	88
SPRING, steering column bearing	23-02	86
SPRING, steering connecting rod ball seat	23-01	84
SPRING, support, control lever	17-06B	68
SPRING, tool box lid ring	33-02	112
SPRING, transfer gear shifter shaft lock plunger	35-03	115
SPRING, transmission shift lever poppet	17-06	67
SPRING, transmission synchronizer	17-03	67
SPRING, water pump bearing retainer	14-04	50
SPRING, water pump seal	14-04	50
SPRING, wheel brake shoe return	24-04	89
SPRING, windshield ventilator lid ratchet	31-11	111
SPRING and RETAINER, master cylinder piston return, assembly	24-06	92
SPROCKET, camshaft	10-11	24
SPROCKET, crankshaft	10-11	24
STEM and COLLAR, assembly	35-08	121
STEP, assembly	29-01A	102
STOP, bi-metal spring	10-20	29
STOP, throttle wire	12-07	41

Description	Group No.	Page No.
S		
STOP, windshield ventilator lid ratchet	31-11	111
STOP LEAK, radiator	35-54	135
STRAINER, check, pump	12-04	38
STRAP, battery ground	15-18A	62
STRAP, battery hold down, frame to fender	15-18	62
STRAP, drive gear bolt lock	20-03	75
STRAP, engine ground	15-18A	62
STRAP, fuel tank hold down, assembly	12-01	36
STRAP, hold down, windshield, assembly	31-11	110
STRAP, locating, propeller shaft guard support, rear	35-27	132
STRAP, muffler support	13-01	47
STRAP, tail pipe support	13-01A	48
STRAP, top, assembly	35-10B	123
STRAP, top bow storage, assembly	35-17	126
STRAP, top roll, assembly	35-10	122
STRAP and BUCKLE, rear top curtain	35-10A	123
STRIKER, windshield center lock	31-11	110
STRIP, filler, weatherstrip, windshield, glass	31-11	111
STRIP, neoprene, anti-rattle clip	11-01	31
STUD, 1/4"-20 x 1"	15-05A	52
STUD, 5/16"-24 x 2 3/4"	10-13	24
STUD, 3/8"-16 x 1 5/16"	10-12	24
STUD, 3/8"-24 x 1 1/2"	10-19	29
STUD, 3/8"-24 x 1 3/4"	10-19	29
STUD, 3/8"-24 x 2 1/8"	10-19	29
STUD, 7/16"-14 x 3 9/16"	10-02	18
STUD, brake operating lever, copper	24-01	87
STUD, ball, clutch control	11-02	35
STUD, camshaft thrust plunger	10-12	24
STUD, connecting	35-08	121
STUD, exhaust pipe to manifold	10-19	29
STUD, single type	31-11	110
STUD, steering arm	20-07	78
STUD, support, spare wheel	31-09A	109
STUD and BRACKET, ball, clutch control, assembly	11-02	35
STUD and EYELET, button	35-10	122
SUPPORT, battery, assembly	15-18	62
SUPPORT, generator, assembly	15-01	51
SUPPORT, oil float	10-15	26
SUPPORT, ratchet tube bracket	24-01	88
SUPPORT, starting motor	15-02	51
SUPPORT, steering column	23-03	86
SUPPORT, step	29-01A	102
SUPPORT and BRACE, battery, assembly	26-01	97
SWITCH, fog light, assembly	35-36	134
SWITCH, headlight dimmer, foot, assembly	15-12	60
SWITCH, heater	35-18	128
SWITCH, ignition	15-05	51
SWITCH, ignition, lock cylinder and keys	15-05A	52
SWITCH, instrument panel light	15-12B	60
SWITCH, lighting, less circuit breaker and knob	15-12A	60
SWITCH, lighting, with circuit breaker, knob and set screw, assembly	15-12A	60
SWITCH, starting, assembly	15-13	61
SWITCH, stop light, assembly	15-14	61
SYNCHRONIZER UNIT, transmission, assembly	17-03	67
SYNCHRONIZER UNIT and BLOCKING RING, transmission, assembly	17-03	67
T		
TAG, caution, lubrication	35-08	120
TANK, fuel, assembly	12-01	35
TANK, master cylinder supply	24-06	92
TAPPET, engine valve	10-09	23
TEE, axle brake tube	24-07	93
TEE, connecting, windshield wiper hose	35-34	133
TERMINAL, 11/32"	15-18A	63
TERMINAL, battery clamp	15-18A	63
TERMINAL, contact, tell-tale light	15-11A	60
TERMINAL, flag eye type	15-07	55
TERMINAL, ignition cable, distributor end	15-06	52
TERMINAL, slip type	15-07	55
THERMOSTAT ASSEMBLY	14-06	50
THINNER, general purpose	34-01	113

Description	Group No.	Page No.
T		
TOP, body, assembly	35-17	126
TRANSMISSION ASSEMBLY	17-01	64
TREADLE, accelerator, assembly	12-08	41
TROUGH, drain, hood hinge	30-01	102
TUBE, 1/4", oil gauge, assembly	10-17	28
TUBE, brake master cylinder hose	24-07	93
TUBE, crankcase ventilator valve, assembly	10-18	29
TUBE, front propeller shaft, assembly	19-02	73
TUBE, front top center bow spacer	35-17	126
TUBE, fuel and vacuum pump to carburetor	12-03	36
TUBE, fuel pump to carburetor, assembly	12-03	36
TUBE, fuel tank to flexible connection, assy	12-03	36
TUBE, manifold to windshield wiper	31-13	111
TUBE, master cylinder to rear hose assy	24-07	93
TUBE, oil filler, assembly	10-16	26
TUBE, oil filter, inlet	10-17	28
TUBE, propeller shaft, assembly	35-05	117
TUBE, radiator water connecting	14-02	49
TUBE, rear propeller shaft, assembly	19-02	73
TUBE, speedometer	16-04	64
TUBE, tee brake hose	24-07	93
TUBE, vacuum, intake manifold to vacuum pump	12-03	36
TUBE, windshield wiper	35-34	133
TUBE and BELL CRANK BRACKET, cross, front, assembly	26-01	95
TUBE and BRACKET, air cleaner, assembly	12-05	41
TUBE and BUSHING, assembly	35-08	121
TUBE and BUSHING for spring	35-08	121
TUBE and CAM, steering gear, assembly	23-02	86
TUBE and SHAFT, speedometer, assembly	16-04	64
TUBING, manifold to windshield wiper	31-13	111
U		
UNION, inverted flared tube, 1/4"	10-17	28
UNIT, sealed beam, headlight, assembly	15-08	57
V		
VALVE, check, assembly	24-06	92
VALVE, choke, assembly	12-04	38
VALVE, crankcase ventilator, assembly	10-18	29
VALVE, engine exhaust	10-08	23
VALVE, engine intake	10-08	23
VALVE, fuel pump, assembly	12-09	44
VALVE, heat control	10-20	29
VALVE, shut-off	35-18	128
VALVE, throttle	12-04	38
VENT, atmospheric	35-08	121
W		
WASHER, 1/4" special	15-05A	52
WASHER, 5/16" special, flange to drive gear nut	35-03	115
WASHER, 1" O.D.	15-09	58
WASHER, attaching, bowl cover	12-04	38
WASHER, axle shaft nut	20-04	75
WASHER, axle shaft thrust	20-05	76
WASHER, bi-metal spring	10-20	29
WASHER, camshaft gear	10-11A	24
WASHER, clamp, manifold	10-19	29
WASHER, clutch adjusting screw	11-01	31
WASHER, clutch lever	35-08	121
WASHER, clutch pedal shank draft pad	11-02	35
WASHER, companion flange nut	18-04	71
WASHER, cork, 1 1/16" I.D.	23-02	86
WASHER, countershaft thrust	17-05	67
WASHER, differential bearing cap bolt	20-02	73
WASHER, eyelet	35-17	126
WASHER, fan pulley shield	14-05	50
WASHER, fastener	35-10A	123
WASHER, felt, axle shaft grease retainer	25-03A	95
WASHER, finish, No. 10	31-09	108
WASHER, flat, No. 6	31-08	108
WASHER, flat, No. 8	12-08	41
WASHER, flat, No. 10	31-11	110
WASHER, flat, 1/4"	30-01	102
WASHER, flat, 1/4", special	15-07A	55
WASHER, flat, 5/16"	12-08	41

Description	Group No.	Page No.
W		
WASHER, flat, 3/8"	35-08	120
WASHER, flat, 7/16", core to support bracket nut	14-01	48
WASHER, flat, 1/2"	35-21	131
WASHER, flat, 1/2" x 1 1/4" O.D.	23-02	86
WASHER, flat, 5/8" I.D., 1" O.D.	31-11	110
WASHER, flat, 21/64" I.D.	15-01	51
WASHER, flat, 33/64" I.D.	15-01	51
WASHER, flat, 21/32"	35-10	122
WASHER, flat, 1 1/2" O.D. x 1 1/32" I.D. x 1/32"	11-02	35
WASHER, fuel and vacuum pump link spacer	12-09A	46
WASHER, fuel pump diaphragm spring seat	12-09	44
WASHER, fuel pump rocker arm pin	12-09	44
WASHER, governor speed adjusting lever	35-08	120
WASHER, horn contact	15-17A	62
WASHER, instrument light wire lead spring insulating	15-11	60
WASHER, intermediate gear thrust	18-05	71
WASHER, metering rod pin	12-04	38
WASHER, oil retaining, front	17-02	64
WASHER, operating lever link	24-01	88
WASHER, output shaft thrust	18-04	71
WASHER, pinion thrust	20-03	75
WASHER, plain, No. 10, bumper to hood top screw	30-01	102
WASHER, plain, 1/4"	12-05	41
WASHER, plain, 5/16"	10-16A	26
WASHER, plain, 3/8"	10-23	30
WASHER, plain, 7/16", master cylinder bolt	24-06	91
WASHER, plain, 5/8"	23-01	84
WASHER, plain, 7/8"	23-01	84
WASHER, power take-off companion flange	35-04	115
WASHER, rear axle shaft	22-05	82
WASHER, retainer, pulley bearing	35-08	121
WASHER, retaining, governor shaft bearing	35-08	120
WASHER, rubber, 5/8" I.D., 1 3/4" O.D.	35-18	128
WASHER, shock absorber mounting pin	28-01	101
WASHER, side gear thrust	20-03	75
WASHER, special, governor control	35-08	121
WASHER, special, spring clip plate and shaft	27-03	101
WASHER, spherical, 7/16"	35-36	134
WASHER, spring, windshield frame adjusting arm	31-11	110
WASHER, spring, windshield pivot	31-11	110
WASHER, steering connecting rod bell crank shaft, lower	23-01	84
WASHER, thrust	35-05	117
WASHER, thrust, 1.328 I.D., 2 3/16" O.D.	35-21	131
WASHER, thrust, camshaft	10-11	24
WASHER, thrust, crankshaft	10-03	20
WASHER, tongued, 3/4"	35-04	115
WASHER, transmission control lever	17-06	67
WASHER, transmission main shaft	17-03	67
WASHER, universal joint yoke sleeve	19-02	73
WASHER, water pump seal	14-04	50
WASHER, wheel brake anchor pin	24-04	89
WASHER, windshield wiper handle to windshield frame	31-13A	111
WASHER, window retainer	15-09B	60
WATERPROOFER, soldine, Olive drab	35-54	135
WEATHERSTRIP, windshield	31-12	111
WEATHERSTRIP, windshield glass	31-11	111
WEATHERSTRIP, tool box lid	33-02	112
WEATHERSTRIP, ventilator lid	31-11	111
WEATHERSTRIP, windshield to cowl	31-11	111
WEIGHT, front bumper arm	35-13	124
WEIGHT, governor	35-08	120
WHEEL, steering, assembly	23-04	86
WINCH, capstan, assembly	35-21	129
WINDOW, license plate light	15-09B	60
WINDSHIELD, complete, assembly	31-11	109
WIRE, 18 guage, seal to deflector	35-12	124
WIRE, headlight, assembly	15-09	58
WIRE, lead, instrument panel, assembly	15-11	60
WIRE, master cylinder piston stop lock	24-06	92
WORM and GEAR SET, capstan winch	35-21	131
WRENCH, socket	33-01	112
Y		
YOKE, adjusting, 1/4"-28	35-08	120
YOKE, adjusting end, 5/16"	11-02	35
YOKE, propeller shaft flange	19-02	73
YOKE, remote control shift rod, adjusting	17-07	69
YOKE, universal joint end, front, assembly	18-04	71
YOKE, universal joint end, W/dust shield assembly	22-04	82
YOKE and PLUG, universal joint sleeve, assembly	19-02	73
YOKE END, universal joint, assembly	20-04	75
Z		
ZIPPER, 8" long, door hand opening	35-17B	128
ZIPPER, 24" long, front body top	35-17A	127
ZIPPER, 24" long, left side	35-17B	128
ZIPPER, 63" long	35-10B	123
ZIPPER, front door	35-17	126

NUMERICAL INDEX

Part No.	Description	Group No.	Page No.
A-146	BRACKET	10-23	30
A-147	BOLT	18-09	72
A-176	PAD	11-02	33
A-177	RETAINER	11-02	35
A-178	SPRING	11-02	35
A-179	STUD and BRACKET	11-02	35
A-180	BRACKET	11-02	33
A-181	STUD	11-02	35
A-183	BOLT	24-06	91
A-185	BRACKET	24-08	93
A-271	SPACER	28-01	101
A-281	CLAMP	12-05	39
A-302	BRUSH	15-17A	62
A-348	WRENCH	33-01	112
A-405	PEDAL	11-02	33
A-410	WASHER	17-03	67
A-415	BRACKET	26-01	95
A-416	SPACER	26-01	95
A-418	BRACKET	10-23	30
A-419	BRACKET	10-23	30
A-420	BRACKET	10-23	30
A-421	BRACKET	10-23	30
A-439	HOUSING	10-22	30
A-447	FAN	14-05	50
A-463	HORN	12-05	40
A-473	BOLT	25-01	94
A-474	BOLT	25-01	94
A-481	BUMPER	26-01	97
A-490	BOLT	19-02	73
A-491	NUT	19-02	73
A-493	RETAINER	24-08	93
A-495	SHAFT	24-08	93
A-498	WASHER	11-02	35
A-500	BRACKET	26-01	97
A-508	BRACKET	14-01	48
A-513	BOLT	27-03	100
A-514	BOLT	27-03	100
A-515	SEAL	27-03	101
A-520	NUT	17-03	67
A-534	PLATE	26-01	95
A-544	BRACKET	26-01	97
A-548	NUT	26-01	95
A-549	NUT	26-01	95
A-552	REINFORCEMENT	35-15	125
A-556	CYLINDER	24-06	91
A-557	FITTING	24-06	91
A-564	STUD	10-19	29
A-568	PLATE and SHAFT	27-03	101
A-571	PLATE and SHAFT	27-03	101
A-572	PLATE and SHAFT	27-03	101
A-574	CLIP	27-03	101
A-575	CLIP	27-03	100
A-589	SCREW	17-07	69
A-592	HOSE	14-02	49
A-593	HOOK	35-15	125
A-612	SPRING	27-01	98
A-612-1	LEAF	27-01	99
A-612-2	LEAF	27-01	99
A-612-3	LEAF	27-01	99
A-612-4	LEAF	27-01	99
A-612-5	LEAF	27-01	99
A-612-6	LEAF	27-01	99
A-612-7	LEAF	27-01	99
A-612-8	LEAF	27-01	99
A-614	SPRING	27-02	99
A-614-1	LEAF	27-02	99
A-614-2	LEAF	27-02	99
A-614-3	LEAF	27-02	99
A-614-4	LEAF	27-02	99
A-614-5	LEAF	27-02	99
A-614-6	LEAF	27-02	99
A-614-7	LEAF	27-02	99
A-614-8	LEAF	27-02	99
A-614-9	LEAF	27-02	99
A-622	COVER	23-01	83
A-623	SHIELD	23-01	84
A-633	NUT	15-17A	62
A-634	BUTTON	15-17A	62
A-635	CLAMP	23-02	85
A-637	OUTRIGGER	26-01	95
A-642	SHIELD	12-05	41
A-657	STRAP	13-01	47
A-658	INSULATOR	13-01	46
A-668	NUT	26-01	97
A-740	HOUSING	23-02	86
A-742	TUBE	23-02	86
A-745	LEVERSHAFT	23-02	86
A-747	RING	15-17A	62
A-750	WASHER	15-17A	62
A-751	FERRULE	15-17A	62
A-752	CABLE	15-17A	62
A-754	ECCENTRIC	24-04	89
A-755	NUT	24-04	89
A-760	BOLT	20-05	75
A-779	OIL SEAL	20-07	77
A-780	WASHER	20-05	76
A-782	GASKET	20-02	73
A-792	STRAP	20-03	73
A-793	CASE	20-03	73
A-794	GEAR	20-03	73
A-796	PINION	20-03	73
A-799	SPACER	20-04	75
A-811	KNUCKLE	20-07	77
A-812	KNUCKLE	20-07	77
A-814	CONTAINER	20-07	77
A-820	GASKET	20-07	77
A-821	BOLT	20-07	76
A-822	ARM	20-07	76
A-824	PIN	20-07	78
A-825	PIN	20-07	78
A-826	ARM	20-07	76
A-828	CAP	20-07	76
A-830	SHIM	20-07	78
A-831	SHIM	20-07	78
A-832	SHIM	20-07	78
A-833	SHIM	20-07	78
A-837	CLAMP	23-01	83
A-838	SOCKET	23-01	84
A-844	COVER	23-01	83
A-847	SOCKET	23-01	84
A-851	SPINDLE and BUSHING	20-07	78
A-853	BUSHING	20-07	76
A-856	PIN	23-01	84
A-857	BEARING	23-01	83
A-858	SEAL	23-01	84
A-860	WASHER	23-01	84
A-862	SHIM	20-05	76
A-863	SHIM	20-05	76
A-864	OIL SEAL	25-03	95
A-865	WASHER	25-03	95
A-866	NUT	25-03	95
A-867	WASHER	25-03	95
A-868	FLANGE	20-05	75
A-870	BREATHER	17-01	64
A-871	BOLT	20-03	73
A-872	SCREW	20-07	77
A-873	NUT	20-07	76
A-875	BOLT	23-01	83
A-876	NUT	23-01	84
A-877	BOLT	24-04	89
A-887	SEAL	11-02	35
A-888	HOUSING and TUBE	21-02	78
A-901	SHAFT	21-05	80
A-902	SHAFT	21-05	80
A-903	BOLT	24-04	89
A-904	GASKET	21-01	78
A-912	MANIFOLD	10-19	29
A-914	CUP	26-01	97

Part No.	Description	Group No.	Page No.
A-916	BEARING	17-03	64
A-924	BEARING	18-05	71
A-934	BREATHER	18-02	69
A-935	YOKE and PLUG	19-02	73
A-937	PLUG	19-02	73
A-940	RETAINER	19-02	73
A-941	GASKET	19-02	73
A-942	CAP	19-02	73
A-943	WASHER	19-02	73
A-945	SNAP RING	19-02	73
A-950	YOKE	19-02	73
A-953	COVER	18-02	69
A-954	GASKET	18-02	71
A-956	CAP	18-02	69
A-957	GASKET	18-02	71
A-958	OIL SEAL	18-01	69
A-959	FORK	18-07	71
A-960	FORK	18-07	71
A-962	ROD	18-07	71
A-963	SCREW	18-07	72
A-965	INTERLOCK	18-07	72
A-966	SPRING	18-07	72
A-967	PLUG	18-07	72
A-970	SPRING	18-06	71
A-971	BALL	17-06B	68
A-972	PIN	18-06	71
A-973	SCREW	18-06	71
A-974	OIL SEAL	18-01	69
A-976	SNAP RING	18-04	71
A-979	SHIELD	18-04	71
A-980	NUT	18-04	71
A-982	SHIM	18-02	71
A-983	SHIM	18-02	71
A-984	SHIM	18-02	71
A-985	BUSHING	16-04	64
A-987	BUSHING	18-04	71
A-990	WASHER	18-04	71
A-991	SNAP RING	18-04	71
A-992	GEAR	18-04	71
A-998	SHAFT	18-05	71
A-1000	WASHER	18-05	71
A-1001	PLATE	18-05	71
A-1007	BEARING	18-04	71
A-1028	WASHER	18-04	71
A-1089	WASHER	15-07A	55
A-1097	CLIP	27-03	100
A-1098	STRAP	15-18A	62
A-1104	PLUG	18-02	71
A-1106	YOKE	18-04	71
A-1111	SHIELD	18-04	71
A-1116	ARM	23-02	85
A-1120	SPACER	32-01	112
A-1124	SHIELD	14-05	50
A-1125	WASHER	14-05	50
A-1126	COCK	10-02	18
A-1127	GUSSETT	32-01	112
A-1128	GUSSETT	32-01	112
A-1129	GUSSETT	32-01	112
A-1130	GUSSETT	32-01	112
A-1134	GASKET	18-04	71
A-1135	WASHER	18-02	69
A-1136	BOLT	18-02	69
A-1150	CROSS MEMBER	26-01	95
A-1165	MANIFOLD	10-19	29
A-1166	MANIFOLD	10-19	29
A-1175	ROD	12-08	41
A-1192	ELBOW	10-02	18
A-1197	TUBE	10-17	28
A-1198	TUBE	10-17	28
A-1202	BRACKET	14-01	48
A-1204	BRACKET and SHAFT	28-01	101
A-1205	BRACKET and SHAFT	28-01	101
A-1215	CAP	14-01	48
A-1216	GASKET	14-01	48
A-1217	ROD	14-01	48
A-1230	FILTER	10-16A	26
A-1231	COVER	10-16A	26
A-1232	BOLT	10-16A	26
A-1233	GASKET	10-16A	27
A-1234	SPRING	10-16A	27
A-1235	GASKET	10-16A	27
A-1236	ELEMENT	10-16A	26
A-1237	PLUG	10-16A	27
A-1239	GEAR	23-02	85
A-1240	JACK	33-01	112
A-1243	SHAFT and LEVER	12-08	41
A-1247	BRACKET	10-16A	26
A-1251	CLAMP	10-16A	26
A-1252	RETAINER	27-03	101
A-1265	BUSHING	10-19	29
A-1267	TUBE and SHAFT	16-04	64
A-1271	SWITCH	15-14	61
A-1273	ROD	12-08	41
A-1276	CLAMP	23-03	86
A-1277	BUSHING	23-03	86
A-1283	BRACKET	24-07	92
A-1289	CLIP	10-17	27
A-1293	GASKET	12-02	36
A-1309	CONDUIT and GUIDE	12-06	41
A-1312	HORN ASSEMBLY	15-17	61
A-1318	NUT	31-09B	109
A-1341	BRACKET	24-06	91
A-1343	TUBE	16-04	64
A-1344	SHAFT	16-04	64
A-1349	BREAKER	15-12A	60
A-1350	LOCKWASHER	15-05A	52
A-1354	BAR	24-06	91
A-1355	LEVER and TUBE	11-02	33
A-1362	WIRE	15-09	58
A-1363	WIRE	15-09	58
A-1372	TERMINAL	15-07	55
A-1376	TUBE	24-07	93
A-1377	TUBE	24-07	93
A-1378	CLIP	24-07	92
A-1389	BRACKET	15-17	61
A-1392	BRACKET	15-01	51
A-1395	INSULATOR	15-01	51
A-1396	WASHER	15-01	51
A-1397	BOLT	15-01	51
A-1399	BRACE	15-01	51
A-1400	GUIDE	15-01	51
A-1401	WASHER	15-01	51
A-1410	WASHER	17-03	67
A-1422	SPACER	23-02	86
A-1426	JOURNAL	19-02	73
A-1433	KIT	19-02	73
A-1434	BEARING	19-02	73
A-1443	FLYWHEEL	10-21	29
A-1445	YOKE END	20-04	75
A-1450	TUBE	10-17	28
A-1456	UNION	10-17	28
A-1457	GUARD	24-07	92
A-1468	SCREW	15-01	51
A-1470	BUSHING	15-01	51
A-1484	CYLINDER	24-05	89
A-1488	TUBE	24-07	93
A-1491	BRACE and HANDLE	15-01	51
A-1494	BOWL	12-09	42
A-1501	TUBE	24-07	93
A-1502	CYLINDER	24-05	89
A-1504	ROD	18-07	71
A-1505	LEVER	18-06	71
A-1506	LEVER	18-06	71
A-1508	COVER	18-02	69
A-1509	GASKET	18-02	71
A-1511	GEAR	16-04	61
A-1515	CLAMP	24-07	92
A-1538	GASKET SET	10-14	26
A-1565	NUT	15-13	61
A-1691	HUB and BEARING CUPS	25-02	95
A-1694	CLIP	12-03	36
A-1702	WASHER	30-01	102
A-1714	STUD	20-07	78
A-1715	SHAFT and UNIVERSAL JOINT	20-06	76
A-1718	SHAFT	20-06	76

Part No.	Description	Group No.	Page No.
A-1719	CAGE	20-06	76
A-1720	RACE	20-06	76
A-1721	BALL	20-06	76
A-1722	PILOT	20-06	76
A-1723	PIN	20-06	76
A-1724	RETAINER	20-06	76
A-1725	SCREW	20-06	76
A-1726	SNAP RING	20-06	76
A-1727	SHAFT	20-06	76
A-1728	SHAFT and UNIVERSAL JOINT	20-06	76
A-1729	SHAFT	20-06	76
A-1731	CABLE	15-09	58
A-1735	CLAMP	24-01	87
A-1755	REINFORCEMENT	32-01	112
A-1756	REINFORCEMENT	32-01	112
A-1760	COVER	23-02	86
A-2190	PLATE	31-06	107
A-2220	WASHER	31-11	110
A-2250	WEATHERSTRIP	31-12	111
A-2263	NUT	31-03	106
A-2278	NUT	31-03	106
A-2361	BRACE	31-05	106
A-2375	NUT	15-01	51
A-2476	WEATHERSTRIP	31-12	111
A-2478	GLASS	31-11	110
A-2479	PADDING	31-12	111
A-2483	WASHER	31-11	110
A-2489	SCREW	31-11	111
A-2662	ANTI-SQUEAK	29-01	102
A-2843	BRACE	29-01	102
A-2844	BRACE	29-01	102
A-2859	SUPPORT	23-03	86
A-2932	SEAL	31-10	109
A-2939	PLATE	31-11	110
A-3051	SOCKET	31-07	107
A-3052	FASTENER	35-17	126
A-3053	WASHER	35-17	126
A-3096	BRACE	15-01	51
A-3150	BOLT	35-11	124
A-3158	ANTI-SQUEAK	29-01	102
A-3159	ANTI-SQUEAK	29-01	102
A-3179	BOLT	29-01	102
A-3538	NUT	31-05	106
A-3549	RETAINER	14-03	49
A-3550	NUT	14-03	49
A-3713	LOOP	31-11	110
A-3721	BRACKET	31-11	109
A-3755	SCREW	31-11	110
A-3761	KNOB	31-11	110
A-3763	CATCH	31-11	110
A-3782	SEAL	31-10	109
A-3983	SPRING	35-09	121
A-4260	WASHER	31-11	110
A-4299	BRACKET	31-11	109
A-4302	HANDLE	31-11	110
A-4306	BUSHING	31-11	110
A-4413	SHIM	14-01	48
A-4414	SHIM	14-01	48
A-5081	CABLE	15-17A	62
A-5083	CABLE	15-05A	52
A-5085	LOOM	15-07	55
A-5086	LOOM	15-07	55
A-5087	DIFFERENTIAL	20-03	73
A-5105	BRACKET	10-16	26
A-5113	BAG	35-21	129
A-5121	PLATE	10-23	31
A-5197	SCREW	15-05A	52
A-5224	TUBE	24-07	93
A-5225	TUBE	24-07	93
A-5226	TUBE	24-07	93
A-5227	BRACKET	24-07	92
A-5335	SPRING	24-01	88
A-5393	CLIP	24-01	87
A-5449	CLIP	10-17	27
A-5450	CLIP	15-07	53
A-5504	STUD	20-07	78
A-5598	CLIP	15-07	52
A-5629	BODY	12-05	39
A-5630	ELEMENT	12-05	40
A-5631	CUP	12-05	40
A-5632	GASKET	12-05	40
A-5633	GASKET	12-05	40
A-5707	GEAR	16-04	51
A-5753	CLAMP	13-01	46
A-5835	GEAR SET	20-03	73
A-6084	BOLT	24-01	87
A-6110	CYLINDER	24-05	89
A-6111	CYLINDER	24-05	89
A-6113	PISTON and SHOE GUIDE	24-05	89
A-6116	CUP	24-05	89
A-6117	BOOT	24-05	89
A-6118	MUFFLER ASSEMBLY	13-01	46
A-6119	CLAMP	13-01	46
A-6133	KIT	24-05	89
A-6156	INSULATOR	10-23	30
A-6273	SHAFT	20-05	76
A-6276	SHAFT	20-05	76
A-6277	SHAFT	20-05	76
A-6278	PIN	20-05	75
A-6279	PIN	20-05	75
A-6288	BALL	20-05	75
A-6289	BALL	20-05	75
A-6290	BALL	20-05	75
A-6291	BALL	20-05	75
A-6292	BALL	20-05	75
A-6293	BALL	20-05	75
A-6294	BALL	20-05	75
A-6295	BALL	20-05	75
A-6305	SPRING	23-01	84
A-6357	GASKET	10-01	18
A-6359	PAD	11-02	33
A-6360	WASHER	11-02	35
A-6362	BUSHING	20-05	75
A-6373	HOSE	14-02	49
A-6393	BOLT	35-15	125
A-6439	GUIDE	21-05	80
A-6525	CAP and LEVEL INDICATOR	10-16	26
A-6701	WASHER	14-05	50
A-6710	LINK	12-08	41
A-6740	CUP	18-09	72
A-6743	KIT	20-03	73
A-6749	KIT	10-13	25
A-6750	GASKET SET	10-13	24
A-6794	RING SET	10-07	22
A-6837	GASKET SET	12-04	36
A-6839	KIT	14-04	50
A-6885	ELBOW	10-18	29
A-6895	VALVE	10-18	29
A-6911	TUBE and BRACKET	12-05	41
A-6915	TUBE	10-16	26
A-6918	HOSE	12-05	40
A-6919	BODY	10-18	29
A-6922	TUBE	10-18	29
A-7107	ANCHOR	15-01	51
A-7111	KIT	20-06	76
A-7191	SPRING	12-05	41
A-7225	SWITCH	15-13	61
A-7233	BEARING SET	10-05	21
A-7234	BEARING SET	10-05	21
A-7235	BEARING SET	10-05	21
A-7236	BEARING SET	10-05	21
A-7238	PAN	10-14	26
A-7280	GASKET	10-16	26
A-7361	GASKET	35-03	115
A-7445	OIL SEAL SET	18-01	69
A-7498	INSULATOR	10-23	30
A-7503	KIT	10-21	29
A-7687	CHAINS	35-53	135
A-7696	TAG	10-21	30
A-7699	STUD	35-08	121
A-7703	TUBE and BUSHING	35-08	121
A-7707	SPRING	35-08	121
A-7831	GASKET SET	21-01	78
A-7835	GASKET SET	10-19	29
A-7838	KIT	24-06	91

Part No.	Description	Group No.	Page No.
A-8125	NUT	16-04	51
A-8126	BRACKET	16-04	51
A-8127	NUT	16-04	51
A-8128	BRACKET	16-04	51
A-8129	LOCKWASHER	12-02	36
A-8131	BRACKET	16-02	63
A-8132	BRACKET	12-02	36
A-8289	CLIP	27-03	101
A-8291	CLIP	27-03	100
A-8440	PAD	11-02	33
A-8445	SHAFT	23-01	84
A-8463	SPRING	27-01A	99
A-8463-1	LEAF	27-01A	99
A-8463-2	LEAF	27-01A	99
A-8463-3	LEAF	27-01A	99
A-8463-4	LEAF	27-01A	99
A-8463-5	LEAF	27-01A	99
A-8463-6	LEAF	27-01A	99
A-8463-7	LEAF	27-01A	99
A-8463-8	LEAF	27-01A	99
A-8463-9	LEAF	27-01A	99
A-8463-10	LEAF	27-01A	99
A-8477	PAD	24-08	93
A-8835	SHAFT	18-04	71
A-8836	SHAFT and UNIVERSAL JOINT	20-05	75
A-8837	SHAFT and UNIVERSAL JOINT	20-05	75
A-8841	SHAFT	18-04	71
A-8847	CLAMP	24-01	87
A-8848	SPACER	24-01	88
A-9093	BOLT and NUT	15-18A	62
A-9094	NUT	15-18A	62
A-9158	JOINT	35-21	131
A-9194	SPACER	35-21	129
A-9201	PIN	35-21	131
A-9203	SPRING	35-21	131
A-9207	FORK	35-21	131
A-9208	BUSHING	35-21	131
A-9210	BRACKET and BUSHING	35-21	131
A-9214	SHAFT	35-21	129
A-9330	CAP and BUSHING	18-02	69
A-9332	DRUM	24-01	87
A-9333	BRAKE	24-01	86
A-9334	BOLT	18-02	69
A-9336	BOLT	18-02	69
A-9337	BOLT	18-02	69
A-9338	WASHER	24-01	87
A-9339	STUD	24-01	87
A-9340	PIN	24-01	88
A-9490	BELT	14-05	50
A-10052	GASKET	24-01	87
A-10119	BEARING	35-03	115
A-10199	PIPE	13-01	46
A-10231	COVER	20-02	73
A-10269	PEDAL	11-02	35
A-10284	BRACKET	35-21	129
A-10324	SHOE and LINING	24-01	88
A-10329	LINING	24-01	88
A-10330	BRACKET	24-01	86
A-10331	SCREW	24-01	88
A-10332	SCREW	24-01	88
A-10333	LEVER	24-01	87
A-10334	LINK	24-01	88
A-10335	NUT	24-01	88
A-10336	SPRING	24-01	88
A-10337	SPRING	24-01	88
A-10338	SPRING	24-01	88
A-10455	FLUID	28-01	101
A-10469	GEAR	18-03	71
A-11030	NUT	31-03	106
A-11775	WASHER	14-01	48
A-12085	NUT	29-01A	102
A-12101	HINGE	30-01	102
A-12102	PIN	30-01	102
A-12462	NUT	31-03	106
A-12752	HOSE	35-34	133
A-12753	HOSE	35-34	133

Part No.	Description	Group No.	Page No.
A-15042	GEAR	18-05	71
A-15044	GEAR	18-04	71
A-15045	GEAR	18-04	71
A-15150	HANDLE	24-01	87
A-15428	OIL SEAL	17-03	67
A-15728	SPRING	27-02A	99
A-15728-1	LEAF	27-02A	99
A-15728-2	LEAF	27-02A	99
A-15728-3	LEAF	27-02A	99
A-15728-4	LEAF	27-02A	99
A-15728-5	LEAF	27-02A	99
A-15728-6	LEAF	27-02A	99
A-15728-7	LEAF	27-02A	99
A-15728-8	LEAF	27-02A	99
A-15728-9	LEAF	27-02A	99
A-15728-10	LEAF	27-02A	99
A-15728-11	LEAF	27-02A	99
A-15737	GUSSETT	26-01	95
A-15801	HOSE	24-07	92
A-15802	HOSE	24-07	92
A-15803	HOSE	24-07	93
A-17097	WASHER	23-02	86
A-17160	NUT	16-02	63
A-17253	BUSHING	24-01	86
A-17254	LEVER and BUSHING	24-01	87
A-17317	SEAL	12-05	40
A-17318	SEAL	12-05	40
A-17647	BRACKET	16-01	63
A-17715	HORN ASSEMBLY	15-17	61
5009	LOCKWASHER	10-03	19
5010	LOCKWASHER	10-02	18
5020	PIN	24-06	91
5021	PIN	27-03	100
5036	KEY	10-03	19
5038	WASHER	23-02	85
5051	LOCKWASHER	11-01	31
5059	LOCKWASHER	10-22	30
5064	SCREW	16-04	64
5067	PIN	12-08	41
5085	PLUG	10-02	18
5108	PIN	10-15	26
5113	SCREW	12-03	36
5121	WASHER	12-05	41
5134	PIN	23-01	84
5137	PIN	17-07	69
5138	PLUG	10-19	29
5139	PLUG	10-02	19
5140	PLUG	17-01	64
5152	PIN	23-01	83
5168	LOCKWASHER	12-03	36
5215	RIVET	27-03	100
5247	RIVET	31-05	106
5248	RIVET	31-05	106
5253	SCREW	12-02	36
5267	RIVET	10-23	30
5272	SCREW	10-20	29
5308	RIVET	33-02	112
5336	NUT	11-02	35
5349	PLUG	35-06	117
5354	PIN	11-02	35
5397	PIN	17-03	67
5433	PIN	12-08	41
5437	WASHER	13-01	46
5455	WASHER	15-01	51
5544	NUT	26-01	95
5556	SCREW	12-02	36
5599	BALL	17-06A	67
5659	RIVET	31-04	106
5781	NUT	24-01	87
5790	NUT	15-09B	60
5901	NUT	10-12	24
5910	NUT	10-13	24
5914	NUT	12-05	41
5916	NUT	10-23	30
5919	BOLT	10-12	24
5920	BOLT	15-17	61
5922	BOLT	13-01	46
5934	BOLT	10-23	30

Part No.	Description	Group No.	Page No.
5938	LOCKWASHER	27-03	101
5939	NUT	23-02	86
6157	BOLT	11-02	35
6167	NUT	13-01	46
6184	BOLT	10-22	30
6188	BOLT	24-07	93
6212	RIVET	33-02	112
6273	NUT	24-07	92
6298	PIN	17-06	67
6299	BOLT	15-02	51
6330	WASHER	12-04	38
6352	NUT	10-20	29
6412	BOLT	10-11A	24
6428	BOLT	12-09A	44
6536	NUT	15-07A	55
6556	YOKE	35-08	120
6599	CLEVIS	24-01	87
6606	BOLT	10-22	30
6609	BOLT	13-01A	47
6779	WASHER	14-01	48
6989	NUT	31-15	111
10558	NUT	23-01	84
50151	BOLT	15-18A	62
50163	BOLT	10-12	24
50585	PLIERS	33-01	112
50768	KEY	17-07	69
50769	RIVET	10-23	30
50802	NUT	35-21	131
50811	NUT	35-01	113
50814	SCREW	31-07	107
50847	BOLT	35-01	113
50878	BOLT	13-01	47
50913	SCREW	31-03	106
50917	KEY	10-11	24
50922	NUT	12-04	38
50929	BOLT	13-01	46
50933	WASHER	15-05	52
50960	WASHER	35-01	113
50968	PIN	35-21	129
50992	BOLT	11-02	35
51040	SCREW	12-07	41
51091	PLUG	10-02	18
51308	BOLT	10-23	30
51352	LOCKWASHER	35-08	120
51371	BOLT	23-02	86
51396	BOLT	10-16A	26
51405	BOLT	15-02	51
51406	BOLT	15-02	51
51460	PLUG	10-11	24
51483	SCREW	35-08	120
51485	BOLT	10-14	26
51486	BOLT	10-13A	25
51487	BOLT	17-07	69
51492	BOLT	35-04	115
51514	BOLT	14-05	50
51523	BOLT	10-15	26
51537	SCREW	12-08	41
51542	BOLT	12-09A	44
51546	SCREW	12-09	42
51575	CONE and ROLLERS	18-04	71
51612	BOLT	23-02	86
51662	WASHER	12-08	41
51692	RIVET	35-12	124
51732	BOLT	12-05	41
51763	BOLT	10-22	30
51765	RIVET	35-09	121
51787	RIVET	35-12	124
51798	BOLT	24-06	91
51804	LAMP	15-08	57
51819	SCREW	10-13	24
51823	BOLT	32-01	112
51833	LOCKWASHER	10-13	24
51858	BOLT	10-13A	25
51867	CUP	35-06	117
51875	GASKET	10-01	18
51883	BOLT	24-06	92
51904	SCREW	17-07	69
51921	PLUG	10-22	30
51969	LOCKWASHER	17-07	69
51980	RIVET	14-03	49
51984	SCREW	35-04	115
51986	SCREW	35-21	129
52025	RIVET	31-08	108
52031	LOCKWASHER	12-01	35
52036	SCREW	10-22	30
52045	LOCKWASHER	17-07	69
52046	LOCKWASHER	14-03	49
52101	WASHER	10-23	30
52124	LAMP	15-08	57
52131	SCREW	15-12	60
52132	BOLT	11-02	33
52142	SCREW	15-13A	61
52161	NUT	14-01	48
52164	NUT	14-01	48
52168	BOLT	12-01	35
52169	BOLT	14-01	48
52189	BOLT	10-23	30
52216	NUT	12-02	36
52217	NUT	31-10	109
52221	LOCKWASHER	10-17	27
52230	WASHER	31-08	108
52237	SCREW	15-07	53
52274	WASHER	10-16A	26
52290	SCREW	12-04	38
52330	LOCKWASHER	10-03	19
52332	LOCKWASHER	12-06	41
52349	LOCKWASHER	10-11A	24
52378	LOCKWASHER	10-11A	24
52379	BOLT	10-22	30
52428	LOCKWASHER	10-19	29
52510	LOCKWASHER	10-13A	25
52525	PLUG	10-13	25
52527	PIN	23-01	84
52542	NUT	14-03	49
52543	BOLT	29-01	101
52553	RIVET	24-01	88
52558	LOCKWASHER	31-09	108
52560	LOCKWASHER	35-36	134
52606	SCREW	15-07A	55
52615	NUT	12-04	38
52624	RIVET	15-18	62
52626	NUT	12-01	36
52650	SCREW	15-07	52
52651	NUT	14-03	49
52652	LOCKWASHER	15-17	61
52653	NUT	14-03	49
52666	BOLT	35-17	125
52667	LOCKWASHER	24-01	88
52668	WASHER	30-01	102
52669	NUT	15-04	51
52702	WASHER	12-05	39
52705	LOCKWASHER	12-02	36
52706	LOCKWASHER	10-22	30
52708	LOCKWASHER	23-01	84
52721	BOLT	12-05	39
52722	SCREW	15-09	57
52768	WASHER	12-08	41
52791	SCREW	15-12	60
52799	CONE and ROLLERS	22-05	82
52800	CUP	22-05	82
52803	PIN	35-03	115
52804	NUT	10-03	19
52819	WASHER	14-03	49
52825	NUT	10-05	21
52832	RIVET	26-01	95
52834	SCREW	15-19	63
52835	WASHER	24-06	91
52836	BOLT	24-06	91
52837	LAMP	15-08	57
52839	CLIP	24-07	92
52840	BOLT	24-07	92
52841	SCREW	35-12	124
52847	NUT	15-13	61
52850	NUT	14-01	48
52868	BOLT	11-02	33
52869	SCREW	10-17	27

Part No.	Description	Group No.	Page No.
52876	CONE and ROLLERS	20-04	75
52877	CUP	20-04	75
52878	CONE and ROLLERS	20-04	75
52879	CUP	20-04	75
52880	CONE and ROLLERS	20-03	73
52881	CUP	20-03	73
52883	CUP	18-04	71
52889	SCREW	12-03	36
52892	SCREW	15-04	51
52906	RIVET	26-01	95
52909	NUT	10-23	30
52911	BOLT	10-02	18
52913	SCREW	17-07	69
52916	SCREW	31-15	111
52921	BOLT	35-27	132
52925	NUT	23-02	86
52940	CONE and ROLLERS	20-07	77
52941	CUP	20-07	77
52942	CONE and ROLLERS	25-03	95
52943	CUP	25-03	95
52944	PIN	11-02	35
52945	BOLT	26-01	95
52954	NUT	12-08	41
52967	PIN	17-07	69
52979	CONE and ROLLERS	22-03	80
52980	CUP	22-03	80
52983	BOLT	13-01	46
52990	SCREW	31-09	108
52994	SCREW	15-15	61
53025	LOCKWASHER	15-18A	63
53026	WASHER	15-18A	62
53027	WASHER	23-02	86
53029	LOCKWASHER	15-11A	60
53032	WASHER	35-21	129
53037	NUT	35-17A	127
53038	BOLT	35-21	129
53045	LOCKWASHER	35-01	113
53047	LOCKWASHER	12-01	36
53058	LOCKWASHER	14-01	48
53061	NUT	31-11	111
53062	NUT	12-04	39
53065	BOLT	29-01	102
53066	BOLT	14-01	48
53068	BOLT	15-17	62
53070	LOCKWASHER	31-11	110
53075	NUT	31-09	108
53108	CLAMP	12-05	39
53111	BOLT	35-02	114
53141	BOLT	35-21	129
53142	BOLT	35-01	113
53183	LOCKWASHER	35-01	113
53194	LOCKWASHER	16-04	64
53238	SCREW	35-18	128
53285	NUT	13-01	46
53287	NUT	10-19	29
53320	CUP	35-04	115
53340	LOCKWASHER	31-11	110
53354	PLUG	10-02	18
53355	SCREW	35-21	129
53356	KEY	35-21	129
53366	SCREW	15-09	57
53372	LOCKWASHER	31-10	109
53378	BOLT	24-01	86
53379	NUT	24-01	88
53381	LOCKWASHER	12-04	38
53382	BOLT	24-06	91
53384	CLAMP	12-05	39
53386	NUT	31-04	106
53390	BOLT	31-09	108
53408	PLUG	10-02	19
53411	PLUG	10-02	18
53422	LOCKWASHER	15-05A	52
53446	SCREW	35-21	131
53453	CONE and ROLLERS	35-06	117
53454	CUP	35-06	117
53510	WASHER	35-08	120
53538	WASHER	24-01	88
53541	BOLT	14-03	49
53556	LOCKWASHER	15-17	61
53564	RIVET	31-04	106
53570	WASHER	23-01	84
53594	CONE and ROLLERS	35-04	115
53624	BOLT and WASHER	24-05	89
53633	SCREW	15-17A	62
53650	WASHER	31-09	108
53654	YOKE	17-07	69
53684	NUT	35-01	113
53686	BOLT	35-02	113
53687	BOLT	35-06	117
53690	BOLT	35-02	113
53695	NUT	15-12A	60
53696	WASHER	15-12A	60
53700	SCREW	35-17	126
53720	CONE and ROLLERS	35-06	117
53724	LOCKWASHER	35-04	115
53729	SCREW	15-09B	60
53732	WASHER	31-09	108
53733	NUT	27-03	100
53735	WASHER	14-01	48
53749	BOLT	23-02	85
53753	NUT	35-15	125
53777	BOLT	35-02	113
53780	LOCKWASHER	35-13	125
53782	BOLT	31-09	108
53784	RIVET	33-02	112
53811	BOLT	17-02	64
53813	CLAMP	14-02	49
53818	BOLT	35-01	113
53820	LOCKWASHER	31-11	110
53821	WASHER	29-01A	102
53822	NUT	31-11	110
53823	SCREW	31-11	110
53826	SCREW	15-09	58
53833	BOLT	35-13	125
53838	NUT	35-36	134
53842	BOLT	15-13	61
53843	WASHER	30-01	102
53848	BOLT	31-11	110
53849	BOLT	35-27	132
53854	LOCKWASHER	15-09	57
53856	BOLT	10-11A	24
53863	SCREW	35-21	131
53864	NUT	10-05	21
53865	BOLT	35-01	113
53867	SCREW	14-03	49
53886	SCREW	12-09	44
53889	SCREW	30-01	102
53898	BOLT	29-01A	102
53900	BOLT	35-27	132
53903	NUT	35-08	120
53904	PLUG	35-08	120
53905	BOLT	15-17	62
53908	NUT	31-03	106
53909	WASHER	35-27	132
53911	BOLT	35-27	132
53914	WASHER	31-11	110
53915	SCREW	31-15	111
53916	SCREW	31-07	107
53917	SCREW	15-05	52
53919	BOLT	31-02	104
53920	SCREW	31-13	111
53921	SCREW	31-11	110
53922	NUT	31-03	106
53923	NUT	12-01	36
53926	SCREW	31-10	109
53928	BOLT	14-03	49
53929	BOLT	30-01	102
53931	BOLT	12-01	36
53932	PIN	28-01	101
53933	BOLT	29-01	101
53934	SCREW	31-13	111
53935	BOLT	31-09A	108
53936	BOLT	31-09	108
53937	NUT	35-10	122
53946	RIVET	35-10	122
53958	BOLT	31-02	104

Part No.	Description	Group No.	Page No.
53961	PIN	35-06	117
53962	WASHER	15-11	60
53963	NUT	12-08	41
53976	SCREW	31-10	109
53986	BOLT	12-08	41
54006	ELL	10-17	28
54022	SCREW	31-11	110
54024	BOLT	35-15	125
54025	LAMP	15-08	57
54026	NUT	15-17	61
54051	LOCKWASHER	35-08	120
54063	SCREW	24-07	92
54073	BOLT	35-36	133
54088	LOCKWASHER	35-36	134
54116	SCREW	31-11	110
54117	NUT	31-11	110
54119	SCREW	15-19	63
54129	BOLT	35-36	134
54132	BOLT	31-02	103
54137	BOLT	35-36	134
54243	NUT	23-01	84
54304	NUT	24-01	88
54359	BOLT	35-36	133
54392	NUT	23-01	83
54394	WASHER	23-01	84
54395	SCREW	15-05A	52
54421	BOLT	35-14	125
78316	CLIP	12-03	36
78932	CLIP	15-18A	62
94000	EXTINGUISHER	35-47	134
94001	WATERPROOFER	35-54	135
94002	WATERPROOFER	35-54	135
94003	WATERPROOFER	35-54	135
94004	WATERPROOFER	35-54	135
94007	CLEANER and WAX POLISH	35-54	135
94008	FLUSH	35-54	135
94009	CLEANER	35-54	135
94010	STOP LEAK	35-54	135
94011	RUST PREVENTATIVE	35-54	135
94012	OIL	35-54	135
94013	OIL	35-54	135
94014	CLEANER	35-54	135
94015	POLISH	35-54	135
94019	LIGHT	35-46	134
94021	CLEANER	35-54	135
94027	KIT	35-43	134
94031	KIT	35-50	134
94034	KIT	35-49	134
94036	EXTINGUISHER	35-47	134
94039	KIT	35-34	133
94046	KIT	35-18	128
94058	SCREEN	35-56	135
94059	SCREEN	35-58	135
94060	KIT	35-36	134
94062	FRONT	35-57	135
94071	KIT	35-59	135
94077	KIT	35-59	135
94094	KIT	35-23	131
GM-103647	COCK	10-02	18
GM-106293	BOLT	23-01	83
GM-109855	BOLT	35-07	119
GM-111684	SCREW	35-59	135
113439	SCREW	12-09	42
113440	WASHER	12-09	42
115543	GASKET	15-09B	60
115545	RETAINER	15-09B	60
115641	ARM	12-09	42
115643	SPRING	12-09	44
115650	COVER	12-09	42
115651	VALVE	12-09	44
115652	GASKET	12-09A	44
115653	CLAMP	12-09	42
115654	SCREEN	12-09	44
115656	GASKET	12-09	42
115828	BALL and ROLLER	35-05	117
115869	WASHER	12-09	44
115870	OIL SEAL	12-09	44
115880	LINK	12-09	44
115905	SCREW	12-05	39
115942	BUTTON and SPRING	35-05	117
115948	TAPPET	10-09	23
115961	KIT	24-06	91
115962	KIT	24-05	89
115995	PISTON AND PIN	10-06	21
115999	RING	10-07	22
116035	COVER	35-05	117
116110	RING and SPRING SET	10-07A	22
116111	RING and SPRING SET	10-07A	22
116112	RING and SPRING SET	10-07A	22
116113	RING and SPRING SET	10-07A	22
116114	RING	10-07	22
116154	VALVE	12-04	38
116157	VALVE	12-04	38
116159	PLUG	12-04	38
116160	PLUG	12-04	38
116161	PLUG	12-04	38
116162	PLUG	12-04	38
116163	PLUG and GASKET	12-04	38
116164	PLUG and GASKET	12-04	38
116165	PLUG and GASKET	12-04	38
116166	NOZZLE	12-04	38
116168	GASKET	12-04	36
116169	GASKET	12-04	36
116170	GASKET	12-04	36
116171	GASKET	12-04	36
116172	FLOAT and LEVER	12-04	36
116173	PIN	12-04	38
116174	NEEDLE, SPRING and SEAT	12-04	38
116175	STRAINER	12-04	38
116176	SCREW	12-04	38
116177	PIN	12-04	38
116178	SPRING	12-04	38
116179	JET	12-04	38
116180	JET	12-04	38
116181	ARM and COLLAR	12-04	36
116183	SPRING	12-04	38
116184	SPRING	12-04	38
116185	SPRING	12-04	38
116186	SPRING	12-04	38
116187	SPRING	12-04	38
116188	SPRING	12-04	38
116189	SPRING	12-04	38
116191	SPRING	12-04	38
116194	RETAINER	12-04	38
116195	PLUNGER and ROD	12-04	38
116197	ARM and SCREW	12-04	36
116198	ROD	12-04	38
116199	LINK	12-04	38
116202	GASKET	12-04	36
116203	GASKET	12-04	36
116204	CHECK and PLUG	12-04	36
116205	CHECK	12-04	36
116206	DISC	12-04	36
116207	WASHER	12-04	38
116208	COVER and PIN	12-04	36
116209	PIN	12-04	38
116210	INSULATOR	12-04	38
116211	SCREW	12-04	38
116213	SCREW	12-04	38
116216	SCREW	12-04	38
116217	SCREW	12-04	38
116219	NUT	12-04	38
116295	BOLT	10-03	19
116329	PIN	12-09A	46
116332	SPRING	12-09A	46
116343	LINK	12-09A	46
116344	LINK	12-09A	46
116345	LINK	12-09A	46
116346	RETAINER	12-09A	44
116347	WASHER	12-09A	46
116384	SCREW and WASHER	12-04	38
116385	SCREW and WASHER	12-04	38
116458	CLIP	27-01	99
116459	CLIP	27-02	99
116460	CLIP	27-01	99
116500	RING	10-07	22

Part No.	Description	Group No.	Page No.
116522	BEARING	10-04	21
116523	BEARING	10-04	21
116524	BEARING	10-04	21
116525	BEARING	10-04	21
116526	BEARING	10-04	21
116527	BEARING	10-04	21
116528	BEARING	10-04	21
116529	BEARING	10-04	21
116530	BEARING	10-04	21
116531	BEARING	10-04	21
116532	BEARING	10-04	21
116533	BEARING	10-04	21
116534	BEARING	10-05	21
116535	BEARING	10-05	21
116536	BEARING	10-05	21
116537	LEVER	12-04	38
116538	SPRING	12-04	38
116539	JET	12-04	38
116540	ROD	12-04	38
116541	JET and GASKET	12-04	38
116542	LINK	12-04	38
116544	HORN	12-04	36
116545	SHAFT and LEVER	12-04	38
116549	SHOE and LINING	24-03	89
116550	SHOE and LINING	24-03	89
116551	LINING	24-03	89
116552	LINING	24-03	89
116586	LEVER and BRACKET	12-04	38
116587	CLAMP	12-04	36
116588	SCREW	12-04	38
116589	CLIP	27-02	99
116600	LINING SET	24-03	89
116616	RING	10-07	22
116647	PLUG	12-04	38
116651	SCREW	12-04	38
116670	ROD	35-28	132
116694	SPRING	12-09	44
116695	DIAPHRAGM and ROD	12-09	42
116698	OIL SEAL and GASKET SET	23-02	86
116706	RING and SPRING SET	10-07A	22
116711	BOLT and NUT	27-01	98
116712	LINING SET	24-01	88
116714	FLANGE	18-04	71
116716	BOLT and NUT	27-02	99
116747	BODY	12-09	42
116748	GASKET	12-09	42
116749	BAIL and SEAT	12-09	42
116759	RING SET	10-07	22
116760	GASKET	12-09	42
116761	PIN	12-09	44
116762	WASHER	12-09	44
116763	PRIMER	34-01	113
116767	ENAMEL	34-01	113
116768	ENAMEL	34-01	113
116769	SCREW and WASHER	12-04	38
116770	COVER	35-05	117
116785	GASKET	12-04	39
116827	CYLINDER and KEY	15-05A	52
116828	KEY	15-05A	52
116829	CYLINDER with KEY	35-33	133
116830	KEY	35-33	133
116844	KEY	31-09B	109
116846	FLANGE	12-04	38
116847	SHAFT and LEVER	12-04	38
116848	SCREW	12-04	38
116849	LEVER	12-04	38
116853	PULLEY	35-08	120
116854	RING	35-08	120
116855	WASHER	35-08	121
116856	PLUG	35-08	120
116857	SPACER	35-08	121
116858	COLLAR	35-08	120
116859	PIN	35-08	120
116860	LEVER	35-08	120
116861	CUP	35-08	120
116862	SPRING	35-08	121
116863	LEVER	35-08	120
116864	SCREW	35-08	121
116965	ARM and MOUNTING BRACKET	31-15	111
116966	BRACKET	31-15	112
117109	JET	12-04	38
117114	BRACKET	10-16A	26
117115	CLAMP	10-16A	26
117116	SPRING	15-09	58
117122	SCREW and WASHER	12-04	38
117135	ARM	12-09A	44
117138	BUSHING	12-09A	44
117141	FILTER	12-09A	44
117142	RETAINER	12-09A	46
117144	RETAINER	12-09A	46
117146	SCREW	12-09A	46
117147	SPRING	12-09A	46
117151	BODY	12-09A	44
117152	PLATE	12-09A	46
117153	GASKET	12-09A	44
117154	GASKET	12-09A	44
117155	RETAINER	12-09A	46
117156	SEAT	12-09A	46
117157	SCREEN	12-09A	46
117160	SPRING	12-09A	46
117164	KIT	35-05	117
117353	RING	11-01	31
117367	SPRING	11-01	31
117368	PLUG	12-04	39
117369	NOZZLE	12-04	39
117372	KIT	10-03	19
117373	KIT	10-03	19
117422	DIAPHRAGM	12-09A	44
117423	BODY with OIL SEAL	12-09A	44
117424	COVER	12-09A	44
117426	CUP	12-09A	44
117427	GASKET	12-09A	44
117428	GASKET	12-09A	44
117429	PLATE	12-09A	46
117430	SCREEN	12-09A	46
117431	SCREW	12-09A	46
117432	OIL SEAL	12-09A	46
117433	SPACER	12-09A	46
117434	SPRING	12-09A	46
117435	DIAPHRAGM	12-09A	44
117436	SCREW	12-09A	46
117482	PLATE	11-01	31
117483	PLATE	11-01	31
117484	LEVER	11-01	31
117485	LEVER	11-01	31
117486	SCREW	11-01	31
117487	PIN	11-01	31
117488	SPRING	11-01	31
117520	OIL SEAL	12-09A	44
117521	GASKET	12-09A	44
117644	CLIP	12-04	39
117645	ROD	12-04	39
117651	INSTRUCTIONS	35-34	133
117653	CLAMP	13-01	46
117730	UNIT	15-08	57
GM-120629	SCREW	31-09A	109
GM-120915	BOLT	35-14	125
GM-121920	BOLT	31-11	110
GM-123917	BOLT	35-01	113
GM-126025	NUT	23-01	84
GM-126696	BOLT	35-14	125
GM-133784	SCREW	31-09A	109
GM-138530	LOCKWASHER	35-59	135
GM-160035	SCREW	31-11	110
GM-161857	SCREW	14-01	48
GM-178364	LOCKWASHER	35-59	135
GM-191350	FITTING	23-01	84
GM-216914	BOLT	24-06	92
GM-221154	SCREW	31-10	109
300143	STUD	10-19	29
300329	NUT	15-18	62
301232	SCREW	12-04	38
301435	BUSHING	15-06	52
303466	GROMMET	35-08	120
306688	SLEEVE	15-07	55

Part No.	Description	Group No.	Page No.
306715	HANDLE	33-01	112
307556	TERMINAL	15-07	55
307908	PLUG	35-08	120
311003	PIN	24-01	88
314338	GASKET	10-14	26
314369	TERMINAL	15-06	52
315932	LOCKWASHER	10-11	24
323397	BOLT	15-18A	62
330964	PIN	10-13	25
332515	STUD	10-19	29
334103	GASKET	10-01	18
339043	PIN	11-02	35
339372	NUT	27-03	101
343306	PINION	10-13	25
344732	WASHER	10-19	29
345961	GROMMET	10-16A	27
347002	BUSHING	15-06	52
349368	STUD	10-02	18
352760	LOCKWASHER	15-09B	60
356053	TERMINAL	15-07	55
356155	SPRING	10-13	25
359039	BUSHING	27-01	98
371400	TERMINAL	15-18A	63
372438	STOP	12-07	41
372668	TERMINAL	15-18A	63
374586	RIVET	24-03	89
375070	PIN	17-07	69
375217	COVER	10-22	30
375811	GUIDE	10-08	23
375877	SLINGER	10-03	20
375900	WASHER	10-11	24
375907	PLUNGER	10-11	24
375908	SPRING	10-11	24
375917	RING	10-12	24
375920	RETAINER	10-03	20
375927	GASKET	10-01	18
375981	STUD	10-13	24
375994	LOCK	10-08	23
376373	PLUG	10-02	19
377159	PIN	35-08	120
380197	GASKET	10-13	24
381519	BOLT	10-03	19
384228	BOLT	27-03	100
384549	ELBOW	10-18	29
384568	NUT	12-03	36
384569	ELBOW	10-17	27
384710	NUT	24-07	93
384958	STUD	10-12	24
387633	NUT and PIN	10-03	19
387891	CONNECTOR	10-17	27
390510	COVER	23-02	85
392909	FITTING	17-07	69
393196	TERMINAL	15-07A	57
393594	SEAL	15-06	52
GM-426913	NUT	15-13	61
GM-427752	BOLT	24-01	88
GM-427926	BOLT	31-08	108
GM-428445	BOLT	31-03	106
GM-442825	NUT	31-02	104
GM-442827	NUT	35-14	125
GM-442828	NUT	31-02	104
GM-443342	NUT	35-01	113
GM-446362	WASHER	13-01A	48
605688	RING	31-09	108
630068	FULCRUM	11-02	33
630101	BOLT	10-22	30
630103	COVER	10-22	30
630112	LEVER	11-02	33
630117	SPRING	11-02	35
630129	BOLT	11-01	31
630262	SHIM	10-03	20
630299	GASKET	10-01	18
630303	COVER	10-10	23
630305	GASKET	10-01	18
630359	GASKET	10-01	18
630364	STUD	10-12	24
630365	GASKET	10-01	18
630384	BODY	10-13	24
630387	COVER ASSEMBLY	10-13	24
630389	SHIM	10-13	25
630390	RETAINER	10-13	25
630392	GASKET	10-01	18
630394	GASKET	10-01	18
630396	FLOAT	10-15	26
630397	SUPPORT	10-15	26
630398	GASKET	10-01	18
630518	PLUNGER	10-13	25
630528	CLAMP	13-01A	48
630534	CLAMP	13-01A	48
630593	SPRING	11-02	35
630595	BOLT	35-02	113
630598	NUT	20-07	77
630727	SPACER	10-11	24
630753	PLUG	23-01	84
630754	SPRING	23-01	84
630755	SEAT	23-01	84
630756	PLUG	23-01	84
630757	PLUG	23-01	84
630889	GASKET	12-04A	39
631105	WASHER	15-05A	52
632156	DOWEL	10-21	29
632157	SCREW	10-06	21
632158	BOLT	10-10	23
632159	STUD	10-19	29
632174	SPRING	12-08	41
632177	YOKE	11-02	35
633013	BLOCK	12-08	41
633949	BOLT	15-01	51
634010	BELT	14-05	50
634432	BUSHING	27-03	100
634758	INSULATOR	18-09	72
634759	SNUBBER	18-09	72
634762	WASHER	18-09	72
634796	WASHER	10-03	20
634811	GASKET	10-01	18
634813	GASKET	10-01	18
634814	GASKET	10-01	18
634850	BOLT	10-11	24
635097	CLAMP	12-05	39
635377	DOWEL	10-03	19
635394	GEAR	10-21	29
635476	TERMINAL	15-11A	60
635516	NUT	25-01	94
635529	BEARING	11-02	33
635532	BUSHING	27-03	100
635629	WASHER	27-03	101
635681	SPRING	24-01	88
635737	SWITCH	15-12B	60
635757	TERMINAL	15-07	55
635838	BALL	17-06	67
635849	WASHER	35-04	115
635865	BOLT	35-04	115
635868	BOLT	17-06B	68
635886	STUD	15-05A	52
635935	CONNECTOR	35-36	134
635981	CONNECTOR	15-07	53
635985	CONNECTOR	15-07	53
636004	CLAMP	13-01	46
636035	NUT	25-01	94
636229	WASHER	35-05	117
636232	SPRING	35 05	117
636233	BODY	35-05	117
636234	GASKET	35-05	117
636235	COVER	35-05	117
636297	BEARING and SHAFT	14-04	49
636298	SPRING	14-04	50
636299	PULLEY	14-05	50
636344	NUT	22-05	82
636360	PIN	20-03	73
636372	WASHER	25-03A	95
636374	KEY	22-05	82
636396	SLEEVE	16-04	64
636438	BEARING	10-20	29
636439	VALVE	10-20	29
636464	SHAFT	20-03	73
636527	BOLT	20-02	73

Part No.	Description	Group No.	Page No.
636528	WASHER	20-02	73
636537	BOLT	22-02	73
636538	PLUG	20-02	73
636547	BOLT	22-03	82
636548	STRAP	22-03	82
636551	WASHER	22-03	82
636552	PINION	22-03	82
636553	SHAFT	22-03	82
636554	WASHER	22-03	82
636565	GASKET	20-04	75
636566	SLINGER	20-04	75
636568	SHIELD	20-04	75
636569	NUT	20-03	73
636570	WASHER	20-04	75
636571	PIN	22-04	82
636575	NUT	24-01	87
636577	PLUG	20-02	73
636599	SHAFT and ROTOR	10-13	25
636600	DISC	10-13	24
636729	SPRING	15-11A	60
636796	BOLT	10-15	26
636909	WASHER	20-03	73
636961	PIN	10-06	21
636962	NUT	10-05	21
637007	BEARING	10-04	20
637008	BEARING	10-04	20
637041	PISTON and PIN	10-06	21
637042	RING	10-07	22
637044	RETAINER	10-08	23
637045	GUIDE	10-08	23
637047	TAPPET	10-09	23
637052	BODY	14-04	49
637053	GASKET	10-01	18
637065	CAMSHAFT	10-11	24
637098	PACKING	10-01	18
637182	VALVE	10-08	23
637183	VALVE	10-08	23
637206	SHAFT	10-20	29
637208	SPRING	10-20	29
637209	WASHER	10-20	29
637210	LEVER	10-20	29
637211	KEY	10-20	29
637234	WASHER	20-03	75
637235	WASHER	20-03	73
637237	PACKING	10-01	18
637380	PIN	35-05	117
637425	GEAR	10-13	25
637426	GASKET	24-07	92
637427	CLIP	24-07	92
637432	TEE	24-07	93
637437	FLUID	24-09	94
637439	CLIP	24-07	92
637540	SCREW	24-05	89
637545	SPRING	24-05	89
637546	BOOT	24-05	89
637577	PISTON and SHOE GUIDE	24-05	89
637579	CUP	24-05	89
637580	SPRING	24-05	89
637582	TANK	24-06	92
637583	SEAT	24-06	92
637584	VALVE	24-06	92
637585	RETAINER	24-06	92
637586	CUP	24-06	91
637587	SPRING and RETAINER	24-06	92
637590	CUP	24-06	91
637591	PISTON	24-06	92
637595	CUP	24-06	91
637597	PLATE	24-06	92
637598	WIRE	24-06	92
637599	ROD	24-06	92
637602	BOOT	24-06	91
637604	GASKET	24-06	91
637605	BOLT	24-06	91
637606	GASKET	24-06	91
637608	CAP	24-06	91
637612	GASKET	24-06	91
637615	SPRING	15-03	51
637628	PIN	17-07	69
637635	WRENCH	33-01	112
637636	PUMP	10-13	24
637646	THERMOSTAT	14-06	50
637724	BEARING	10-04	21
637725	BEARING	10-04	21
637748	SPRING	17-07	69
637749	INSULATOR	15-11A	60
637790	PACKING	10-03	20
637863	GASKET	10-01	18
637899	PIN	24-04	89
637900	CAM	24-04	89
637901	PLATE	24-04	89
637905	SPRING	24-04	89
637923	WASHER	24-04	89
637924	NUT	24-04	89
637936	BUSHING	28-01	101
638003	WASHER	17-06	67
638010	ANTI-RATTLER	17-07	69
638037	PIN	17-07	69
638058	PLATE	13-01	47
638153	SPRING	11-01	31
638154	SCREW	11-01	31
638155	NUT	11-01	31
638156	SPRING	11-01	31
638157	CUP	11-01	31
638159	PIN	11-01	31
638224	FITTING	18-06	71
638305	WASHER	11-01	31
638381	WASHER	23-02	86
638457	CHAIN	10-11	24
638458	SPROCKET	10-11	24
638459	SPROCKET	10-11	24
638500	FITTING	23-01	84
638513	NUT	10-03	20
638539	NUT	10-02	18
638540	GASKET	10-01	18
638629	INSULATOR	10-23	30
638636	SPRING	10-08	23
638640	GASKET	10-01	18
638646	SUPPORT	15-02	51
638647	PLUG	15-06	52
638654	TERMINAL	15-06	52
638730	BEARING	10-04	20
638731	BEARING	10-04	20
638732	BEARING	10-04	21
638733	BEARING	10-04	21
638737	GASKET	10-01	18
638780	CLAMP	24-01	87
638792	FITTING	11-02	33
638884	SPRING	15-17A	62
638885	CUP	15-17A	62
638918	SHIM	23-02	86
638977	BLOCK	15-07A	55
638993	SPRING	11-01	31
639010	BRACKET	24-01	86
639052	BOLT	10-10	23
639090	BUSHING	23-02	85
639091	BUSHING	23-02	85
639092	PLUG and TUBE	23-02	86
639102	CUP	23-02	86
639103	RING	23-02	86
639104	BALLS	23-02	85
639107	BOLT	23-02	86
639108	SHIM	23-02	86
639109	SHIM	23-02	86
639110	SHIM	23-02	86
639115	NUT	23-02	85
639116	COVER	23-02	85
639118	SCREW	23-02	86
639119	GASKET	23-02	86
639120	BOLT	23-02	85
639121	WASHER	23-02	85
639190	BEARING	23-02	85
639191	SPRING	23-02	86
639192	SEAT	23-02	86
639237	BEARING	10-04	21
639238	BEARING	10-04	21
639239	BEARING	10-04	21

Part No.	Description	Group No.	Page No.
639240	BEARING	10-04	21
639244	HANDLE, Operating	24-01	87
639265	OIL SEAL	20-04	75
639274	CLIP	24-07	92
639297	SPRING	17-07	69
639578	BUSHING	10-21	29
639599	BLOCK	15-15	61
639607	BRACKET	12-08	41
639610	CLIP	12-08	41
639647	BALL	17-07	69
639650	GASKET	10-01	18
639651	RETAINER	14-06	50
639654	CARRIER	11-02	33
639660	HEAD	10-02	18
639734	BUSHING	10-22	30
639743	STOP	10-20	29
639821	COVER	22-02	80
639862	BEARING	10-05	21
639864	RING	10-07	22
639870	GASKET	10-01	18
639949	SPRING	24-05	89
639957	GASKET	22-02	80
639959	SHIM	20-03	75
639960	SHIM	20-03	75
639961	SHIM	20-03	75
639962	SHIM	20-03	75
639967	CASE	22-03	80
639968	SPACER	20-04	75
639969	SHIM	20-04	75
639970	SHIM	20-04	75
639971	SHIM	20-04	75
639972	SHIM	20-04	75
639973	SHIM	20-04	75
639974	SHIM	20-04	75
639975	SHIM	20-04	75
639979	PLUG	10-14	26
639980	GASKET	10-01	18
639992	PUMP	14-04	49
639993	IMPELLER	14-04	49
640008	REFLECTOR	15-19	63
640020	SCREW	10-09	23
640030	GASKET	10-01	18
640031	SEAL	14-04	50
640032	BELLOWS	14-04	49
640033	SPRING	14-04	50
640034	WASHER	14-04	50
640035	HEAD	35-28	132
640038	FITTING	17-07	69
640070	BOLT	10-05	21
640102	RIVET	24-01	88
640109	SHAFT	19-01	73
640110	SHAFT	19-01	73
640112	LEVER	11-01	31
640114	OIL SEAL	20-07	77
640118	OIL SEAL	20-07	77
640122	TRANSMISSION ASSEMBLY	17-01	64
640123	ROD	11-02	35
640124	CABLE	11-02	33
640129	GASKET	17-08	69
640131	SPEEDOMETER ASSEMBLY	16-04	64
640137	HOUSING and TUBE	20-02	73
640144	SHROUD	14-01	48
640145	CORE	14-01	48
640146	CORE	14-01	48
640153	SUPPORT	15-01	51
640155	BRACE	15-01	50
640160	PUMP	12-09	42
640161	HEAD	10-02	18
640166	CLAMP	12-01	35
640168	LINE	12-03	36
640170	ANTI-SQUEAK	12-01	35
640171	ANTI-SQUEAK	12-01	35
640176	ROD	23-01	84
640177	ROD	23-01	84
640178	SOCKET	23-01	84
640179	ROD	23-01	84
640180	ROD	23-01	84
640181	ROD	23-01	84
640184	CRANK	23-01	83
640186	ROD	23-01	84
640187	HOSE	12-05	40
640188	SUPPORT	15-18	62
640192	STRAP	15-18	62
640197	LIGHT	15-09A	58
640198	LIGHT	15-09A	58
640201	FRAME	15-18	62
640206	BRACKET	10-23	30
640207	SPACER	27-04	101
640208	BRACKET	23-01	83
640209	BRACKET and SHAFT	28-01	101
640210	BRACKET and SHAFT	28-01	101
640214	CROSS MEMBER	26-01	95
640218	FRAME ASSEMBLY	26-01	95
640219	CROSS MEMBER	26-01	95
640220	REINFORCEMENT	35-04	115
640221	TUBE	19-02	73
640222	TUBE	19-02	73
640225	REINFORCEMENT	26-01	95
640231	BOLT	14-04	49
640242	STEM and COLLAR	35-08	121
640243	BAR	35-08	121
640244	ROD	35-08	121
640246	CLIP	12-08	41
640254	GOVERNOR ASSEMBLY	35-08	120
640256	BELT	35-08	119
640257	STRAP	15-18A	62
640258	CABLE	15-18A	62
640259	CABLE	15-18A	62
640260	SWITCH	15-12	60
640261	HARNESS	15-07	53
640273	HARNESS	15-07	54
640277	HARNESS	15-07	55
640281	CABLE	15-07	52
640282	PLUG	15-07A	57
640284	LIGHT	15-11	60
640287	CABLE	15-07	52
640288	CABLE	15-07	52
640289	CABLE	15-06	52
640290	CABLE	15-06	52
640291	CABLE	15-06	52
640292	CABLE	15-05	51
640296	PLATE	11-01	31
640299	CASE	18-02	69
640303	ARM	12-04	36
640304	CARBURETOR ASSEMBLY	12-04	36
640306	GEAR	23-02	85
640308	CONNECTION	12-03	36
640309	TUBE	12-03	36
640321	PLATE	35-01	113
640343	SLEEVE	35-03	115
640348	CABLE	10-23	30
640351	GASKET	17-02	64
640353	CABLE and CONDUIT	24-01	86
640360	FACING	11-01	31
640361	FACING	11-01	31
640371	CASE and PLUG	17-01	64
640373	PLUG	17-01	64
640374	FORK	17-06	67
640375	LEVER	17-06	67
640378	SHOE	17-06	67
640379	LEVER	17-06	67
640383	OIL SEAL	17-06	67
640384	LEVER	17-06	67
640386	INSULATOR	17-07	69
640387	LEVER	17-06	67
640390	SHAFT	17-03	64
640391	SYNCHRONIZER UNIT and BLOCKING RING	17-03	67
640392	SYNCHRONIZER UNIT	17-03	67
640393	HUB	17-03	67
640394	SPRING	17-03	67
640395	PLATE	17-03	67
640396	SLEEVE	17-03	67
640397	RING	17-03	67
640398	GEAR	17-03	67
640400	BUSHING	17-03	64

Part No.	Description	Group No.	Page No.
640401	GEAR	17-03	64
640402	SPACER	17-03	67
640403	ADAPTER	17-03	64
640405	GEAR	17-05	67
640408	SPACER	17-05	67
640409	WASHER	17-05	67
640410	WASHER	17-05	67
640411	WASHER	17-05	67
640412	COUNTERSHAFT	17-05	67
640413	COLLECTOR	17-05	67
640416	SCREW	17-05	67
640417	GEAR	17-04	67
640419	BUSHING	17-04	67
640420	SHAFT	17-04	67
640421	PLATE	17-05	67
640422	RETAINER	17-02	64
640428	GEAR	17-02	64
640431	SNAP RING	17-03	67
640437	GASKET	17-01	64
640441	SLEEVE	17-06	67
640442	SLEEVE	17-06	67
640443	SLEEVE	17-06	67
640444	SLEEVE	17-06	67
640448	SHIM	35-06	117
640449	SHIM	35-06	117
640450	SHIM	35-06	117
640451	SHIM	35-06	117
640461	SPACER	35-02	113
640465	SHIM	35-06	117
640466	SHIM	35-06	117
640467	SHIM	35-06	117
640468	SHIM	35-06	117
640469	SHIM	35-06	119
640470	SHIM	35-06	119
640471	SHIM	35-06	119
640472	SHIM	35-06	119
640475	HOUSING	35-06	117
640477	GEAR	35-04	115
640478	GEAR	35-04	115
640479	RETAINER	35-04	115
640480	SHAFT and SLEEVE	35-06	117
640489	SHAFT	35-04	115
640490	CASE	35 04	115
640497	CAP	35-06	117
640498	SHAFT	35-04	115
640499	CARRIER	35-06	117
640502	PULLEY BELT	35-06	117
640506	CLAMP	23-01	83
640507	BOLT	23-01	83
640528	KIT	35-01	113
640532	KIT	35-15	125
640536	DRIVER	33-01	112
640538	SPRING	17-06	67
640542	PLATE	35-04	115
640543	GASKET	35-04	115
640545	OIL SEAL	35-04	115
640546	RETAINER	35-04	115
640547	GASKET	35-04	115
640549	SHIM	35-04	115
640550	SHIM	35-04	115
640551	SHIM	35-04	115
640552	SHIM	35-04	115
640553	POWER	35-04	115
640554	DRIVE	35-06	117
640555	OIL SEAL	35-06	117
640556	SHIM	35-06	117
640557	SHIM	35-06	117
640558	SHIM	35-06	117
640559	SHIM	35-06	117
640560	SPACER	35-06	119
640561	RETAINER	35-06	117
640562	PULLEY	35-06	117
640565	DOOR and LENS	15-09B	60
640570	GASKET	15-09A	58
640571	LENS	15-09A	59
640573	NUT	15-09A	58
640578	BRACKET	11-01	31
640580	JOINT	35-08	121
640581	JOINT	35-08	121
640586	KIT	12-09	42
640587	KIT	15-06	52
640594	CAP	12-01	35
640597	SHIELD	24-06	92
640604	BRACKET and CAP	17-07	69
640605	COLUMN and BEARING	17-07	69
640608	SHAFT	17-07	69
640611	LEVER and CLUTCH	17-07	69
640612	ROD	17-07	69
640613	ROD	17-07	69
640616	COLUMN with REMOTE CONTROL SHAFT	17-07	69
640617	FORK and ROD	35-03	115
640620	GEAR	35-03	115
640621	SPACER	35-03	115
640622	WASHER	35-03	115
640623	SCREW and WASHER	35-03	115
640624	PLATE	35-03	115
640625	SEAL	35-03	115
640626	PLATE	35-03	115
640627	BALL	35-03	115
640628	SPRING	35-03	115
640630	PIN	35-03	115
640632	NUT	35-03	115
640633	POWER TAKE-OFF	35-02	113
640634	GASKET SET	10-01	18
640635	GASKET SET	10-01	18
640636	FACING SET	11-01	31
640637	TUBE	35-05	117
640639	SHAFT	35-02	113
640641	SHELL and HOOD HOLDER	15-11	60
640642	WIRE	15-11	60
640643	WASHER	15-11	60
640644	SPRING	15-11	60
640645	HOOD	15-11	60
640647	NUT	15-11	60
640648	PLATE	35-01	113
640651	DRUM	25-02	95
640656	FLANGE	35-03	115
640658	HOUSING	35-03	115
640659	LEVER	35-03	115
640663	KIT	20-03	73
640666	AXLE	21-01	78
640669	CONTROL	12-07	41
640671	KNOB	12-07	41
640672	HUB and BEARING CUPS	25-02	95
640673	CONDUIT and GUIDE	12-07	41
640674	SHAFT and LEVER	12-04	38
640675	LEVER	12-04	38
640676	SCREW and WASHER	12-04	38
640677	SCREW and WASHER	12-04	38
640678	PLATE	12-04	38
640679	FLANGE	12-04	36
640680	LINK	24-01	88
640681	ANTI-SQUEAK	12-01	35
640682	ANTI-SQUEAK	12-01	35
640685	TANK	12-01	35
640688	CLAMP	13-01	46
640689	PLATE	26-01	95
640691	HOUSING	15-09	58
640692	STRAP	12-01	36
640694	GAUGE	12-02	36
640695	DOOR	15-09	58
640696	CLAMP	12-01	35
640697	DIFFERENTIAL	20-03	73
640698	GEAR SET	20-03	73
640703	BAR	35-01	113
640704	ANTI-SQUEAK	12-01	35
640708	PLATE	35-02	113
640709	LIGHT	15-09	57
640710	LIGHT	15-09	57
640713	BAR	32-01	112
640714	ANGLE	32-01	112
640715	ANGLE	32-01	112
640716	SHIELD	35-02	113
640718	SNAP RING	35-06	119
640721	TREADLE	12-08	41

Part No.	Description	Group No.	Page No.
640724	KIT	35-13	124
640725	KIT	35-02	113
640726	KIT	35-02	113
640729	WEIGHT	35-13	124
640736	COVER	23-02	86
640737	PLATE	35-01	113
640743	SPACER	26-01	95
640745	BRACKET	15-10	60
640749	LIGHT	15-09B	59
640751	CRANK	35-20	129
640752	CRANK	35-20	129
640753	CRANK	35-20	129
640760	WHEEL	23-04	86
640761	AMMETER ASSEMBLY	16-01	63
640762	GAUGE	16-02	63
640763	GAUGE	12-02	36
640764	GAUGE	16-03A	63
640765	CONTROL	12-06	41
640770	KNOB	12-06	41
640777	ROLLERS	17-05	67
640778	SPACER	17-05	67
640779	WASHER	17-05	67
640782	SNAP RING	17-02	64
640783	SNAP RING	17-02	64
640784	SNAP RING	17-02	64
640785	SNAP RING	17-02	64
640786	ROLLER	17-03	67
640787	HOUSING and CABLE	15-09A	58
640788	HOUSING and CABLE	15-09A	58
640789	DOOR	15-09A	58
640790	SCREW	15-09A	59
640791	PLATE	15-09A	59
640793	SNAP RING	35-04	115
640796	WASHER	35-04	115
640797	NUT	35-04	115
640798	GASKET	35-04	115
640800	RIM and DISC	25-01	94
640805	INSTRUCTIONS	35-21	129
640807	WINCH	35-21	129
640808	PLATE	35-21	129
640812	BRACKET	35-21	129
640814	BEARING	35-21	131
640815	BEARING	35-21	131
640816	BRACKET	35-21	129
640818	SHAFT	35-21	129
640819	JOINT	35-21	131
640820	SHAFT	35-21	131
640821	ROLLER	35-21	129
640822	HUB	35-21	129
640826	TAG	35-21	129
640834	RING	15-09	58
640835	SCREW	15-09	58
640836	NUT	15-09	58
640837	UNIT	15-08	57
640838	RING	15-09	58
640839	SCREW	15-09	58
640840	BOX	35-21	131
640841	CAPSTAN	35-21	131
640842	CAP	35-21	131
640843	WORM and GEAR SET	35-21	131
640844	SHAFT	35-21	131
640845	PLATE	35-21	131
640846	GASKET	35-21	131
640847	KEY	35-21	131
640848	GASKET	35-21	131
640849	WASHER	35-21	131
640850	WASHER	35-21	131
640851	BUSHING	35-21	131
640852	BUSHING	35-21	131
640853	GASKET	35-21	131
640854	PLUG	35-21	131
640855	RING	35-21	131
640856	RING	35-21	131
640857	GASKET	35-21	131
640858	CAP	35-21	131
640859	BEARING	35-21	131
640860	OIL SEAL	35-21	131
640861	BEARING	35-21	131
640862	COVER	35-21	131
640863	FITTING	35-21	131
640864	HUB	25-02	95
640866	HOUSING	15-09B	60
640868	PULLEY	35-21	129
640869	KIT	35-02	113
640870	KEY	15-05	51
640879	WINDOW	15-09B	60
640880	CORE	35-22	131
640882	TUBE	14-02	49
640883	TUBE	14-02	49
640885	RETAINER	25-03	95
640886	GASKET	25-03A	95
640888	PROTECTOR	25-03A	95
640890	COVER	17-01	64
640892	OIL SEAL	17-02	64
640893	WASHER	17-02	64
640894	SNAP RING	17-02	64
640897	SCREW	15-09	58
640898	LUBRICANT	35-21	129
640904	PISTON and PIN	10-06	21
640905	PISTON and PIN	10-06	21
640906	PISTON and PIN	10-06	21
640907	PISTON and PIN	10-06	21
640912	RING	10-07	22
640913	RING	10-07	22
640914	RING	10-07	22
640915	RING	10-07	22
640916	RING	10-07	22
640917	RING	10-07	22
640918	RING	10-07	22
640919	RING	10-07	22
640920	RING	10-07	22
640921	RING	10-07	22
640922	RING	10-07	22
640923	RING	10-07	22
640924	RING SET	10-07	22
640925	RING SET	10-07	22
640926	RING SET	10-07	22
640927	RING SET	10-07	22
640930	SHAFT	19-01	73
640931	TUBE	19-02	73
640932	PLATE and SHAFT	21-01	78
640933	CLIP	21-01	78
640936	HUB and DRUM	25-02	95
640937	HUB and DRUM	25-02	95
640938	PLATE and SHAFT	21-01	78
640939	KIT	22-03	82
640940	AXLE	21-01	78
640941	CLAMP	24-07	92
640942	TUBE	24-07	93
640943	TUBE	24-07	93
640944	BRACKET	24-07	92
640945	WASHER	22-05	82
640947	BRACKET	12-05	39
640948	BRACKET	12-05	39
640950	HOUSING and TUBE	22-02	80
640959	OIL SEAL	22-05	82
640960	DIFFERENTIAL	22-03	80
640961	GEAR and PINION SET	22-03	80
640964	GEAR	22-03	80
640965	SPACER	22-03	82
640968	SHAFT	22-05	82
640969	SHAFT	22-05	82
640970	RETAINER	22-05	82
640971	SHIM	22-05	82
640972	SHIM	22-05	82
640973	SHIM	22-05	82
640974	SHIM	22-05	82
641046	PUMP	10-13A	25
641047	GEAR	10-13A	26
641048	WASHER	10-11A	24
641049	SPACER	10-11A	24
641050	JET	10-02	18
641082	BRACE	15-01	50
641083	TUBE	10-18	29
641096	GASKET	10-23	30
641128	CRANKSHAFT ASSEMBLY	10-03	19

Part No.	Description	Group No.	Page No.
641138	HARNESS	15-07	54
641143	PLATE	10-23	31
641145	BLOCK and BEARING	10-02	18
641236	SCREW	35-21	131
641240	THINNER	34-01	113
641243	DIFFERENTIAL	22-03	80
641244	GEAR and PINION SET	22-03	82
641251	COLUMN and BEARING	23-02	85
641253	FLANGE	35-04	115
641281	SPACER	10-11A	24
641282	GEAR	10-11A	24
641283	GEAR	10-11A	24
641284	CAMSHAFT	10-11A	24
641293	PUMP	10-13	24
641310	SLEEVE	17-06	67
641421	HOUSING	10-22	30
641478	BODY	10-13A	26
641479	COVER	10-13A	26
641482	GASKET	10-13A	26
641504	PUMP	33-01	112
641505	TAG	35-08	120
641555	BEZEL	14-03	49
641556	LENS	14-03	49
641557	GASKET	14-03	49
641560	DEFLECTOR	35-27	132
641609	SOCKET and CABLE	14-03	49
641615	DRAWING	35-24	131
641622	SWITCH	15-12A	60
641626	SWITCH	15-12A	60
641628	KNOB with SET SCREW	15-12A	60
641629	KNUCKLE and ARM	20-07	77
641630	KNUCKLE and ARM	20-07	77
641631	BAIL	35-27	132
641632	BAIL	35-27	132
641695	RIVET	11-01	31
641710	BOLT	35-27	132
641711	CONNECTOR	35-27	132
641712	BRACKET	35-27	132
641713	STRAP	35-27	132
641715	BRACKET	35-27	132
641729	CASE	18-01	69
641730	TRANSMISSION ASSEMBLY	17-01	64
641731	GASKET	17-08	69
641737	PLATE	35-27	132
641740	SCREW	10-13A	26
641742	SHAFT and ROTORS	10-13A	26
641755	PEDAL	24-08	93
641758	GUARD and BRACKET	35-27	132
641760	KIT	35-27	131
641768	BOLT	10-05	21
641769	NUT	10-05	21
641774	ROD	10-05	21
641775	ROD	10-05	21
641781	BASE	35-08	120
641783	OIL SEAL	35-08	120
641785	SHAFT and CARRIER	35-08	120
641788	WEIGHT	35-08	120
641789	PIN	35-08	120
641790	CLIP	35-08	120
641791	BEARING	35-08	120
641792	PULLEY	35-08	120
641794	COVER	35-08	120
641795	CLUTCH	35-08	120
641796	SPRING	35-08	120
641797	LOCK	35-08	120
641798	KNOB	35-08	120
641799	SLEEVE	35-08	120
641800	BEARING	35-08	120
641801	WASHER	35-08	120
641802	RING	35-08	120
641803	SCREW	35-08	120
641808	BUSHING	35-08	120
641809	DISC	35-08	120
641811	PIN	35-08	120
641813	PLUG	35-08	120
641814	BEARING	35-08	120
641815	WASHER	35-08	120
641816	OIL SEAL	35-08	120
641819	PLUG	35-08	120
641820	GASKET	35-08	120
641821	BEARING	35-08	120
641822	RISER	35-08	120
641824	SPRING	35-08	120
641825	SCREW	35-08	120
641826	GASKET	35-08	120
641827	PLUG	35-08	120
641828	PLUG	35-08	120
641829	LEVER	35-08	120
641830	WASHER	35-08	120
641831	SPRING	35-08	120
641855	EXTENSION	13-01A	48
641856	PIPE	13-01A	48
641870	SHIELD	35-27	132
641872	PIPE	13-01A	48
641873	STRAP	13-01A	48
641874	BRACKET	13-01A	47
641875	CLAMP	13-01A	48
641876	STRAP	13-01A	48
641878	MUFFLER ASSEMBLY	13-01A	47
641916	WASHER	28-01	101
641917	PLATE	24-04	89
641918	HORN	12-05	40
641919	SHIELD	12-05	41
641920	CAP	25-02	95
641921	CLIP	24-01	87
641922	REST	12-08	41
641923	BRAKE	24-02	89
641924	BRAKE	24-02	89
641925	HUB and DRUM	25-02	95
641926	HUB and DRUM	25-02	95
641927	BRAKE	24-02	89
641928	BRAKE	24-02	89
641930	TUBE and BRACKET	12-05	41
641931	PAD	11-02	33
641932	PAD	24-08	93
641936	BODY	35-08	120
641937	FORK	35-08	120
641941	CLAMP	12-05	40
641949	HARNESS	15-07	54
641952	NUT	25-01	94
641953	NUT	25-01	94
641954	BOLT	12-01	36
641955	GEAR	10-21	30
641960	FLYWHEEL	10-21	30
641970	WHEEL	23-04	86
641973	BOLT	35-24	131
642032	KIT	35-28	132
642051	GROMMET	15-09	58
642053	RIM and DISC	25-01	94
642056	ROD	23-01	84
642057	ROD	23-01	84
642058	ROD	23-01	84
642059	ROD	23-01	84
642060	WASHER	23-01	84
642073	SWITCH	15-05	51
642080	AXLE with BRAKES	20-01	73
642084	WASHER	15-09	58
642120	YOKE	22-04	82
642121	SHIELD	22-04	82
642123	CLAMP	13-01A	47
642125	BODY	15-05A	52
642133	CABLE	15-05A	52
642141	SPEEDOMETER ASSEMBLY	16-04	64
642173	PULLEY	35-24	131
642187	CASE	18-02	69
642188	SHAFT	18-05	71
642189	GEAR	18-05	71
642190	BEARING	18-05	71
642191	WASHER	18-05	71
642229	ABSORBER	28-01	101
642230	ABSORBER	28-01	101
642231	DOOR	15-09B	60
642232	LENS	15-09B	60
642233	SPRING	15-09B	60
642237	PLATE	10-23	31
642272	PLATE	10-23	31

Part No.	Description	Group No.	Page No.
642275	ENGINE ASSEMBLY	10-01	18
642280	PLATE	10-23	31
642339	WASHER	35-13	125
642377	TERMINAL	15-07A	57
642520	WASHER	10-11A	24
642622	CLUTCH ASSEMBLY	11-01	31
642624	LEVER and TUBE	11-02	33
642754	CASE	17-01	64
642755	HOUSING	17-06B	68
642757	CAP	17-06A	67
642758	PLUNGER	17-06A	67
642759	PLUG	17-06A	67
642761	BALL	17-06B	68
642762	PIN	17-06B	68
642763	SPRING	17-06B	68
642764	RAIL	17-06A	67
642765	RAIL	17-06A	67
642766	FORK	17-06A	67
642767	FORK	17-06A	67
642768	PIN	17-06A	67
642769	SPRING	17-06A	67
642770	GASKET	17-06B	68
642776	BRAKE	24-01	86
642777	STRAP	13-01A	48
642819	CASE	17-01	64
642821	COVER	17-01	64
642825	CLEANER	12-05	39
642846	BOLT	35-27	132
642847	BRACKET	35-27	132
642853	SPACER	35-15	125
642855	INSTALLATION	35-27	131
642861	BODY	12-05	39
642862	ELEMENT	12-05	40
642863	CUP	12-05	40
642864	SPRING	12-05	41
642895	SPACER	35-15	125
642896	DRAWING	35-15	125
642918	PLATE and HUB	11-01	31
642967	SHOE and LINING SET	24-03	89
642969	KIT	10-03	19
642979	LEVER	17-07	69
642982	LIGHT	15-11A	60
642983	BEZEL and LENS	15-11A	60
642984	HOUSING	15-11A	60
642985	SOCKET	15-11A	60
642987	CLIP	27-03	101
643016	LIGHT and CABLE	15-11A	60
643055	SHOE and LINING SET	24-01	88
643123	HANDLE	24-01	87
643147	FILTER	10-16A	26
643160	SWITCH	15-05A	52
643181	GASKET	10-16A	27
643185	GEAR and PINION SET	35-06	117
643223	BLOCK and BEARING	10-02	18
643260	HARNESS	15-07	54
643261	HARNESS	15-07	54
643275	PLANT	10-01	18
643276	BLOCK and BEARING	10-02	18
643277	ENGINE ASSEMBLY	10-01	18
643332	GOVERNOR	35-08	120
643333	ROD	35-08	120
643337	CARBURETOR ASSEMBLY	12-04	38
643360	ROD	35-08	121
643361	JOINT	35-08	121
643362	KIT	10-13A	26
643365	WASHER	15-09B	60
643454	PLATE	24-01	88
643485	REINFORCEMENT	15-17	61
643533	INSULATOR	10-23	30
643562	KIT	10-21	30
643618	DOOR and LENS	15-09B	60
643619	DOOR	15-09B	60
643621	SPACER	17-03	67
643648	NUT	15-05A	52
643650	DRAWING	35-31	132
643651	HARNESS	35-31	132
643672	VALVE	24-06	92
643674	SPRING	24-06	92
643701	LEVER	17-06	67
643711	SWITCH	15-05A	52
643721	BEARING	17-02	64
643726	LIGHT	15-09B	59
643729	DOOR	15-09A	58
643732	DOOR	15-09	58
643785	KIT	12-09	43
643834	COVER	10-12	24
643839	OIL SEAL	10-03	20
643841	SCREW	24-05	89
643883	KIT	35-24	131
643897	REFLECTOR	15-19	63
643916	LEVER	17-06B	68
643921	SEAL	12-08	41
643922	KIT	35-31	132
643932	COVER	10-12	24
643941	LIGHT	15-09A	58
643942	LIGHT	15-09A	58
643999	KEY	15-05	51
644000	CYLINDER and (1) KEY	15-05	51
644001	SWITCH	15-05	51
644003	LIGHT	35-36	134
644004	LIGHT	35-36	134
644008	ARM	35-36	134
644009	WASHER	35-36	134
644011	CABLE	35-36	134
644012	CABLE	35-36	134
644013	SWITCH	35-36	134
644014	KIT	35-36	133
644033	HARNESS	15-07	55
644036	HARNESS	15-07	54
644067	SPRING	12-08	41
644087	SCREW	35-23	131
644094	BRACKET and PLATE	35-08	119
644106	CLIP	15-07	53
644122	GASKET	17-08	69
644147	GEAR SET	20-03	73
644159	CRANKSHAFT ASSEMBLY	10-03	19
644186	PLANT	10-01	18
644193	KIT	35-06	117
644216	SOCKET and CABLE	14-03	49
644233	BALL	17-06B	68
644315	TRANSMISSION ASSEMBLY	17-01	64
644316	PLATE	17-05	67
644317	TRANSMISSION ASSEMBLY	17-01	64
644318	CASE	18-01	69
644319	CASE	18-02	69
644366	CARRIER	11-02	33
644403	KIT	15-06	52
644425	COVER	10-12	24
644449	UNIT	15-08	57
644519	HEADLIGHT	15-09	57
644520	HEADLIGHT	15-09	57
644542	ELBOW	20-02	73
644548	PULLEY	10-03	20
644551	BEARING	17-03	64
644552	ADAPTER	17-03	64
644758	HARNESS	15-07	54
644759	HARNESS	15-07	54
644762	HARNESS	15-07	54
644829	CAP	35-35	133
644837	CLIP	35-08	121
644838	LOCKWASHER	35-08	121
644839	SPRING	35-08	121
644840	WASHER	35-08	121
644841	PLUG	35-08	121
644842	SCREW	35-08	121
644843	VENT	35-08	121
644844	SPRING	35-08	121
644845	LEVER	35-08	121
644846	PULLEY	35-08	121
644963	PLATE	10-11A	24
645071	OUTRIGGER	26-01	97
645072	OUTRIGGER	26-01	97
645083	BRACKET	26-01	97
645086	BRACKET	26-01	97
645093	BOLT	10-10	23
645094	BOLT	10-10	23

Part No.	Description	Group No.	Page No.
645119	BAR	32-01	112
645160	BEARING SET	10-04	20
645161	BEARING SET	10-04	20
645162	BEARING SET	10-04	20
645163	BEARING SET	10-04	21
645164	BEARING SET	10-04	21
645165	BEARING SET	10-04	21
645166	BEARING SET	10-04	21
645167	BEARING SET	10-04	21
645168	BEARING SET	10-04	21
645169	BEARING SET	10-04	21
645170	BEARING SET	10-04	21
645171	BEARING SET	10-04	21
645176	HARNESS	15-07	54
645177	LIGHT	15-11	60
645178	WIRE	15-11	60
645187	CAP	14-01	48
645230	CONTROL	35-08	120
645232	TUBE and BELL CRANK BRACKET	26-01	95
645249	BEARING	11-02	33
645256	PLUG	10-02	18
645305	MANIFOLD	10-18	29
645313	KIT	35-08	119
645334	AXLE	22-01	80
645337	AXLE	20-01	73
645339	AXLE	21-01	78
645356	PLIERS	33-01	112
645361	MANIFOLD	10-19	29
645367	CLEANER	12-05	39
645368	BODY	12-05	39
645369	CUP	12-05	40
645370	CLAMP	12-05	39
645421	PIN	23-01	84
645430	WASHER	23-01	84
645460	HORN	15-17	61
645462	BRACKET	15-17	61
645470	BRACKET	35-08	119
645534	KIT	35-36	133
645539	CLIP	24-07	92
645548	SPRING	27-01A	99
645548-1	LEAF	27-01A	99
645548-2	LEAF	27-01A	99
645548-3	LEAF	27-01A	99
645548-4	LEAF	27-01A	99
645548-5	LEAF	27-01A	99
645548-6	LEAF	27-01A	99
645548-7	LEAF	27-01A	99
645548-8	LEAF	27-01A	99
645548-9	LEAF	27-01A	99
645548-10	LEAF	27-01A	99
645574	PAD	24-08	93
645582	PAD	11-02	33
645595	BUSHING	10-11	24
645609	WRENCH	33-01	112
645626	HOSE	12-05	40
645628	SPRING	10-13B	26
645629	BUSHING	10-13B	26
645630	BODY with BUSHING	10-13B	26
645631	PUMP	10-13B	26
645634	GASKET	10-16A	27
645636	ELEMENT and GASKET	10-16A	26
645637	ELEMENT	10-16A	26
645638	FILTER	10-16A	26
645662	SPACER	23-01	84
645663	SEAL	23-01	84
645664	BEARING	23-01	83
645702	OUTRIGGER	26-01	97
645739	COLUMN and BEARING	23-02	85
645741	CABLE	15-07	52
645743	HARNESS	15-07	54
645744	GEAR	23-02	85
645746	HOSE	14-02	49
645795	ABSORBER	28-01	101
645796	ABSORBER	28-01	101
645824	HOSE	12-05	40
645829	PLATE	12-04	38
645854	SHAFT	23-01	84
645862	ROD	35-21	129
645864	SPRING	27-02A	99
645864-1	LEAF	27-02A	99
645864-2	LEAF	27-02A	99
645864-3	LEAF	27-02A	99
645864-4	LEAF	27-02A	99
645864-5	LEAF	27-02A	99
645864-6	LEAF	27-02A	99
645864-7	LEAF	27-02A	99
645864-8	LEAF	27-02A	100
645864-9	LEAF	27-02A	100
645864-10	LEAF	27-02A	100
645864-11	LEAF	27-02A	100
645891	OIL SEAL	35-08	121
645895	HORN	15-17	61
645896	BRACKET	15-17	61
645902	HOSE	14-02	49
645932	ROD	35-08	121
645933	TUBE and BUSHING	35-08	121
645934	STEM and COLLAR	35-08	121
645949	PLATE	35-08	121
645950	BODY	35-08	121
645951	CLIP	35-08	121
645968	WASHER	35-08	121
645970	HANDLE and WIRE	35-08	121
645980	OIL SEAL	17-02	64
646022	KIT	35-20	129
646028	KIT	35-40	134
646029	PURIFIER	35-40	134
646052	NIPPLE	35-40	134
646073	SEAL	31-10	109
646084	KIT	23-02	86
646089	KIT	10-20	29
646141	HANDLE and RATCHET TUBE	24-01	87
646142	CABLE and CONDUIT	24-01	86
646150	KIT	35-11	123
646217	DRIVER	33-01	112
646219	SEAL	14-04	50
646240	ABSORBER	28-01	101
646241	ABSORBER	28-01	101
646248	PUMP	12-09	42
646289	HOUSING	23-02	86
646313	BRACKET	15-17	62
646316	CRANKSHAFT ASSEMBLY	10-03	19
646322	TUBE and CAM	23-02	86
646582	FITTING	23-01	83
646594	LIGHT	15-09B	59
646599	HOUSING	15-09B	60
646614	CRANKSHAFT ASSEMBLY	10-03	19
646618	ROD	23-01	84
646620	ROD	23-01	84
646627	SPRING	15-13A	61
646658	ABSORBER	28-01	101
646671	SPACER	27-04	101
646679	KIT	35-07	119
646698	PULLEY	10-03	20
646732	SEAL	14-04	50
646753	HOSE	12-05	40
646770	FAN ASSEMBLY	14-05	50
646773	HORN ASSEMBLY	15-17	61
646808	PLUG with GASKET	15-06	52
646849	ABSORBER	28-01	101
646906	FITTING	23-01	83
646918	LIGHT	15-09B	60
646919	LIGHT	35-31	132
646932	BRACKET	26-01	97
646933	BRACKET	26-01	97
646941	CROSS MEMBER	26-01	97
646942	CROSS MEMBER	26-01	97
646950	FRAME ASSEMBLY	26-01	97
647004	KIT	12-04	38
647008	CRANK	23-01	83
647009	BRACKET	23-01	83
647015	REINFORCEMENT	35-02	113
647016	CROSS MEMBER	26-01	97
647025	BRACKET	26-01	97
647027	BRACKET	26-01	97

Part No.	Description	Group No.	Page No.
647042	SPRING	10-20	29
647048	FRAME ASSEMBLY	26-01	97
647051	HOUSING	15-09B	60
647057	KIT	35-21	129
647058	GAUGE	16-03A	63
647059	DIFFERENTIAL	22-03	80
647060	DIFFERENTIAL	22-03	80
647061	GEAR	22-03	82
647062	PINION	22-03	82
647063	KIT	22-03	82
647065	KIT	35-31	132
647071	TAPPET	10-09	23
647072	TAPPET	10-09	23
647078	KIT	10-03	19
647087	BRACKET	16-03A	63
647089	SPACER	26-01	97
647107	FRAME	15-18	62
647234	PUMP	10-13	24
647282	ROD	24-06	92
647283	BOOT	24-06	92
647284	CAP	24-06	92
647285	GASKET	24-06	92
647286	PISTON	24-06	92
647287	KIT	24-06	92
647288	TANK	24-06	92
647289	GASKET	24-06	92
647297	COVER	24-06	92
647306	SUPPORT and BRACE	26-01	97
647310	TUBE and BELL CRANK BRACKET	26-01	97
647311	ELBOW	10-17	27
647342	FILTER	10-16A	26
647343	GASKET	10-16A	27
647344	ELEMENT	10-16A	27
647345	KIT	10-16A	27
647350	BRACKET and SHAFT	26-01	97
647415	SPACER	26-01	97
647418	REINFORCEMENT	26-01	97
647454	BRACKET and SHAFT	26-01	97
647465	NUT	11-02	33
647468	OIL SEAL	10-03	20
647492	SPRING	24-06	92
647500	ABSORBER	28-01	101
647501	ABSORBER	28-01	101
647538	CAP	35-40	134
647539	GASKET	35-40	134
647540	ELEMENT and SPRING	35-40	134
647541	CLAMP	35-40	134
647542	NUT	35-40	134
647544	TUBE	24-07	93
647558	CYLINDER	24-06	92
647583	TUBE	10-17	28
647584	TUBE	10-17	28
647586	CONNECTION	12-03	36
647592	BAR	24-06	92
647606	BOLT	24-06	92
647629	BELT	14-05	50
647636	PEDAL	24-08	93
647653	DRAWING	35-21	129
647657	SWITCH	15-13	61
647669	SPACER	12-09A	46
647676	POWER TAKE-OFF	35-02	113
647677	GEAR	35-04	115
647678	GEAR	35-04	115
647679	COVER and CLIP	11-02	33
647686	COVER	11-02	33
647690	COLUMN and BEARING	23-02	85
647693	TUBE and CAM	23-02	86
647694	GEAR	23-02	85
647711	ENGINE ASSEMBLY	10-01	18
647712	LINING SET	24-03	89
647713	LINING	24-03	89
647714	LINING	24-03	89
647715	SHOE and LINING SET	24-03	89
647716	SHOE and LINING	24-03	89
647717	SHOE and LINING	24-03	89
647744	CARBURETOR ASSEMBLY	12-04	39
647745	KIT	12-04	39
647746	GASKET SET	12-04	39
647801	SWITCH	15-14	61
647829	HARNESS	15-07	54
647862	PUMP	33-01	112
647869	LEVER	17-06	67
647886	GAUGE	16-02	63
647888	BRACKET	16-02	63
647889	BUSHING	16-02	63
647890	GAUGE	16-03	63
647892	BRACKET	16-03	63
647893	COUPLING	16-03A	64
647910	FRAME ASSEMBLY	26-01	97
647911	PUMP	12-09A	44
647913	ADAPTER	10-23	30
647914	TUBE	12-03	36
647915	TUBE	24-07	93
647916	TUBE	12-03	36
647917	TUBE	12-03	36
647919	BRACKET	26-01	97
647922	PLATE	10-23	31
647939	CLIP	15-13A	61
647940	BLOCK	15-13A	61
647941	ROD	15-13A	61
647951	KIT	10-23	30
647958	HARNESS	15-07A	55
648024	HOSE	12-05	40
648098	CABLE	15-18A	62
648158	BRACKET	15-17	62
648159	HORN ASSEMBLY	15-17	62
648201	ABSORBER	28-01	101
648202	ABSORBER	28-01	101
648221	ABSORBER	28-01	101
648222	ABSORBER	28-01	101
648277	SCREW	24-06	92
648360	CAP	35-22	131
648405	PLATE	11-01	31
648406	BRACKET	11-01	31
648429	CLIP	11-01	31
648431	STRIP	11-01	31
648432	CLUTCH ASSEMBLY	11-01	31
648436	LEVER	11-01	31
648438	BOLT	14-01	48
648439	CLIP	14-01	48
648441	FRAME ASSEMBLY	26-01	97
648442	FRAME ASSEMBLY	26-01	97
648451	RADIATOR	14-01	48
648455	ENGINE ASSEMBLY	10-01	18
648456	ENGINE ASSEMBLY	10-01	18
648457	PLANT	10-01	18
648539	CLUTCH ASSEMBLY	11-01	18
648589	LEVER	18-06	71
648591	FASTENER	24-01	87
648593	LEVER	17-06B	68
648644	KIT	26-01	97
648645	KIT	26-01	98
648646	KIT	26-01	97
648692	TERMINAL	15-18A	63
648696	CABLE	15-18A	62
648746	CAP	14-01	48
648861	BRACKET	10-16A	26
648876	DRAWING	35-08	120
648877	SCREW	20-07	77
648894	DRAWING	35-59	135
648895	SWITCH	35-59	135
648901	LIGHT	35-59	135
648902	LIGHT	35-59	135
648903	DOOR	35-59	135
648904	LENS	35-59	135
648905	GASKET	35-59	135
648906	SCREW	35-59	135
648907	HOUSING	35-59	135
648908	HOUSING	35-59	135
648909	LOCKWASHER	35-59	135
648910	CABLE	35-59	135
648931	KIT	12-09A	44
648933	KIT	12-09A	44
648934	KIT	12-09A	44
648969	TUBE	12-03	36

Part No.	Description	Group No.	Page No.
649163	CONTROL	12-06	41
649165	KNOB, PLUNGER and WIRE	12-06	41
649171	CONDUIT and GUIDE	12-06	41
649203	SHROUD	14-01	48
649207	HOSE	14-02	49
649219	SHAFT	23-01	84
649240	NUT	23-01	84
649241	FRAME	26-01	97
649270	BRACKET	14-01	48
649294	TANK	24-06	92
649341	HOSE	14-02	49
649491	DRAWING	35-23	131
650482	HINGE	12-08	41
650483	SPRING	12-08	41
650484	PIN	12-08	41
650684	SPRING	11-02	35
651589	CHAIN	31-08	108
651590	CHAIN	31-08	108
651593	LINK	31-08	108
651594	COVER	31-08	108
656162	BOLT and WING NUT	15-18	62
656206	BRACKET	35-17	125
656207	BRACKET	35-17	125
656313	STEP	29-01A	102
656314	STEP	29-01A	102
661341	CLIP	15-07	53
661949	CYLINDER and (1) KEY	15-05	51
662010	NUT	31-06	107
662276	GROMMET	15-07	53
662420	GROMMET	10-17	28
663059	SEAL	31-10	109
663068	FILLER	31-04	106
663075	BRACKET	12-01	35
663076	BRACKET	12-01	35
663084	HOOD ASSEMBLY	30-01	102
663089	BRACKET	31-07	107
663090	BRACKET	31-07	107
663107	BRACKET	31-07	107
663109	RISER	31-04	106
663111	LOCK	31-08	108
663112	LOCK	31-08	108
663121	PANEL	31-07	107
663122	PANEL	31-07	107
663123	PANEL	31-07	107
663133	SUPPORT	24-01	88
663137	PANEL	31-06	107
663138	PANEL	31-06	107
663139	PAN	31-03	106
663141	PLATE	31-10	109
663150	FENDER	29-01	101
663151	FENDER	29-01	101
663156	SEAL	31-10	109
663163	CATCH	35-09	121
663165	MIRROR	31-15	111
663170	LOCK	35-09	121
663171	BOW	35-10	122
663181	PLATE	31-11	110
663188	GATE	31-08	108
663189	BOW	35-10	122
663192	BOW	35-17	125
663193	COVER	31-10	109
663194	LOCK	31-08	108
663195	LOCK	31-08	108
663196	TUBE	35-17	126
663197	PLATE	31-10	109
663198	RETAINER	31-11	110
663203	STRAP	35-17	126
663205	STRAP	31-11	110
663207	STRAP	35-10	122
663217	BODY	31-01	103
663218	PANEL	31-03	106
663219	BODY	31-01	103
663221	PANEL	31-07	107
663222	PANEL	31-07	107
663223	PANEL	31-04	106
663224	PANEL	31-04	106
663232	CUSHION	35-09	121
663235	PANEL	31-05	106
663264	BRACKET	24-01	86
663265	PAN	31-04	106
663269	STUD	31-11	110
663274	FRAME	31-11	110
663276	CROSS-PIECE	31-11	110
663280	TOP	35-17	126
663326	CURTAIN	35-17	125
663335	EYELET	35-10	122
663336	WASHER	35-10	122
663340	TOP	35-10	122
663343	CURTAIN	35-10	122
663344	CURTAIN	35-10	122
663359	FLAP	35-10	122
663365	HOSE	31-13	111
663367	BLADE	31-14	111
663368	ARM	31-14	111
663369	NUT	31-14	111
663374	FILLER	31-03	106
663396	BRACKET	31-07	107
663412	PANEL	31-07	107
663413	PANEL	31-07	107
663415	PANEL	31-07	107
663419	EXTENSION	31-04	106
663421	BRACKET	31-09A	108
663428	PIN	31-08	108
663437	RAIL	35-17	125
663438	RAIL	35-17	125
663442	ROD	35-17	126
663443	ROD	35-17	126
663444	ROD	35-17A	126
663445	ROD	35-17A	126
663446	BOW	35-17	125
663447	BOW	35-17	125
663449	SOCKET	35-17	125
663450	SOCKET	35-17	126
663453	BRACKET	35-17	126
663454	BRACKET	35-17	126
663455	BRACKET	35-17	126
663456	BRACKET	35-17	126
663459	DOOR	35-17	125
663460	DOOR	35-17	125
663462	COVER	24-06	91
663466	HOSE	31-13	111
663472	PIN	35-19A	129
663473	PLATE	31-10	109
663476	PIN	33-02	112
663481	LID	33-02	112
663484	PIVOT	35-19	128
663485	PIVOT	35-19	128
663490	RING	31-10	109
663494	PANEL	31-06	107
663495	PANEL	31-06	107
663496	GROMMET	31-10	109
663500	KIT	35-19	128
663502	GROMMET	12-01	36
663505	PLATE	31-07	107
663507	RISER	31-07	107
663508	FRAME	35-17	126
663509	FRAME	35-17	126
663510	LIGHT	35-17	126
663511	FRAME	35-10	122
663512	LIGHT	35-10	122
663516	DEFLECTOR	14-03	49
663517	DEFLECTOR	14-03	49
663520	LINER	14-03	49
663521	LINER	14-03	49
663522	LINER	14-03	49
663523	SEAL	14-03	49
663524	SEAL	14-03	49
663525	SEAL	35-12	124
663534	DEFLECTOR	14-03	49
663536	GUARD	14-03	49
663539	BRACKET	24-08	93
663541	DEFLECTOR	35-12	124
663542	BRACKET	35-12	124
663543	BRACKET	35-12	124
663544	PLATE	35-12	124
663545	SPRING	35-12	124

Part No.	Description	Group No.	Page No.
663546	KIT	35-17	125
663547	KIT	35-10	122
663548	CATCH	30-01	102
663550	KIT	35-12	124
663551	SCREEN	35-12	124
663558	SPRING	31-09	108
663559	LOOP	14-03	49
663591	BODY ASSEMBLY	31-01	102
663595	STUD and EYELET	35-10	122
663596	STUD and EYELET	35-10	122
663597	WASHER	35-10A	123
663598	FRAME	31-09	108
663605	FRAME	35-19	128
663607	PAN	31-09	108
663609	CLIP	31-09	108
663612	PLATE	35-17A	127
663613	HANDLE	35-17B	128
663614	PLATE	35-17B	128
663615	SEAT	31-09	108
663616	SEAT	35-19	128
663617	COVER	31-09	108
663621	CUSH ON	31-09	108
663626	WINDSHIELD ASSEMBLY	31-11	109
663628	FRAME	31-11	110
663630	FRAME and GLASS	31-11	110
663636	MOTOR	31-13	111
663637	TUBING	31-13	111
663640	BRACKET	30-01	102
663642	MIRROR	31-15	112
663647	HANDLE and KNOB	31-13A	111
663648	ARM and BLADE	31-13A	111
663649	NUT	31-13A	111
663650	WASHER	31-13A	111
663651	LOCKWASHER	31-13A	111
663654	SPRING	33-02	112
663656	ROD	35-17	125
663657	ROD	35-17	125
663661	BODY	31-01	102
663663	HANDLE and PIN	35-17	126
663669	HINGE	31-08	108
663671	ARM	31-11	109
663672	SCREW	31-11	110
663673	SCREW	31-11	110
663674	SCREW	31-11	110
663675	LOCKWASHER	31-11	110
663676	BOLT	31-11	110
663677	CLAMP	31-11	110
663678	NUT	15-18	62
663679	BRACKET	31-07	107
663680	BRACKET	31-07	107
663685	BRACKET	31-07	107
663686	SPRING	31-09	108
663694	FRAME	31-11	110
663698	COVER	31-09	108
663702	BRACKET	31-11	109
663705	SCREW	31-11	110
663706	WASHER	31-11	110
663707	ARM	31-11	109
663708	BRACKET	31-11	109
663709	BRACKET	31-11	110
663712	ARM	31-11	109
663743	BUMPER	30-01	102
663783	PAN	31-03	106
663789	PLATE	31-10	109
663790	SEAL	31-10	109
663791	PLATE	31-10	109
663792	SEAL	31-10	109
663793	RING	31-10	109
663794	GROMMET	31-10	109
663796	BODY ASSEMBLY	31-01	102
663808	LOOP	14-03	49
663887	KIT	35-12A	124
664261	BUMPER	31-11	110
664264	SCREW	31-11	110
664283	ARM	31-11	109
664377	NUT	31-10	109
664378	PLATE	31-10	109
664379	COVER	31-10	109
664418	STUD	31-09A	109
664523	ENAMEL	34-01	113
664524	ENAMEL	34-01	113
664713	KEY	15-05A	52
664713-1	KEY	15-05A	52
664715	CYLINDER	15-05A	52
664722	SOCKET	35-17	126
664723	SOCKET	35-17	126
664727	DOOR	35-17A	127
664728	DOOR	35-17A	127
664753	PANEL	31-06	107
664754	PANEL	31-06	107
664756	DOOR	35-17	125
664757	DOOR	35-17	125
664793	LOCK	31-11	110
664801	BLOCK	31-11	109
664803	STRIKER	31-11	110
664948	BODY ASSEMBLY	31-01	102
664986	BRACKET	15-17	61
664987	KIT	35-17	125
664988	ROD	35-17	125
664989	ROD	35-17	125
664998	LOCK	35-33	133
666311	BUTTON	35-17B	127
666312	FASTENER	35-10B	123
666313	SOCKET	35-17B	128
666314	EYELET	35-10B	123
666363	FRAME	35-09	121
666373	KIT	35-09	121
666374	SEAT	35-09	121
666375	COVER	35-09	121
666382	SPRING	35-09	121
666383	COVER	35-09	121
666460	ZIPPER	35-17	126
666504	LEG	31-09	108
666584	LOCK	31-09B	109
666610	GROMMET	35-02	113
666611	GROMMET	31-10	109
666628	KIT	31-09B	109
666676	ENAMEL	34-01	113
666677	ENAMEL	34-01	113
666697	ENAMEL	34-01	113
666712	STEP ASSEMBLY	29-01A	102
666713	STEP ASSEMBLY	29-01A	102
666719	SUPPORT	29-01A	102
666738	MIRROR	35-32	133
666739	MIRROR	35-32	133
666740	BRACKET	35-32	133
666754	ENAMEL	34-01	113
666759	ENAMEL	34-01	113
666760	ENAMEL	34-01	113
666767	MIRROR	31-15	112
666768	ARM and MOUNTING BRACKET	31-15	112
666781	ENAMEL	34-01	113
667007	KIT	35-34	133
667054	LIGHT	35-17	126
667055	LIGHT	35-10	122
667074	TEE	35-34	133
667107	TUBE	35-34	133
667723	ENAMEL	34-01	113
667746	PAN and FLOOR PLATES	31-03	106
667747	PLATE	31-10	109
667826	KIT	35-10A	122
667827	STRAP	35-10A	123
667831	TOP	35-10A	123
667837	CURTAIN	35-10A	122
667838	CURTAIN	35-10A	122
667846	STRAP and BUCKLE	35-10A	123
667851	RAIL	35-10A	123
667859	BOW	35-10A	122
667860	BOW	35-10A	122
667865	MATERIAL	35-10A	123
667888	KIT	35-17A	126
667889	STRAP	35-17A	126
667891	TOP	35-17A	127
667917	DOOR	35-17A	126
667918	DOOR	35-17A	126